CONTENTS

A message to hyundai lift truck operators ····· 0-1
Introduction ····· 0-2
How to use this manual ····· 0-3
EC regulation approved ····· 0-5
Safety labels ····· 0-6
Guide (Direction, Serial number, Symbols) ····· 0-16

1. SAFETY HINTS

1. Daily inspection ····· 1-1
2. Do's and don'ts ····· 1-2
3. Seat belt ····· 1-4
4. No riders ····· 1-5
5. Pedestrians ····· 1-6
6. Operator protection ····· 1-7
7. Fork safety ····· 1-8
8. Pinch points ····· 1-9
9. Travel ····· 1-10
10. Grades, ramps, slopes, and inclines ····· 1-11
11. Tip over ····· 1-12
12. Surface and capacity ····· 1-14
13. Parking ····· 1-15
14. Refueling ····· 1-16
15. Step ····· 1-17
16. Operator's safety rules ····· 1-18
17. Side shift and fork positioner (option) ····· 1-19

2. OPERATING HAZARDS

1. Loose loads ····· 2-1
2. Long and wide loads ····· 2-2
3. Rear swing ····· 2-2
4. Low overhead clearance ····· 2-3
5. Fast turns and high loads ····· 2-3
6. Right angle stacking ····· 2-4
7. Chain slack ····· 2-4
8. Pallets and skids ····· 2-5
9. Caution for electrical lines ····· 2-5
10. Lifting loads ····· 2-6
11. Weight indicator (option) ····· 2-7

3. KNOW YOUR TRUCK

1. General locations ····· 3-1
2. Name plate ····· 3-2
3. Cab devices ····· 3-3
4. Cluster ····· 3-4
5. Switches ····· 3-42
6. Control devices ····· 3-48
7. Air conditioner and heater ····· 3-52
8. Others ····· 3-54
9. Regeneration system ····· 3-74

4. OPERATOR MAINTENANCE AND CARE

1. Daily safety inspection ····· 4-1
2. Suggestion for new truck ····· 4-3
3. Fuel safety practices ····· 4-4
4. Engine oil service interval&management ····· 4-5

5. STARTING AND OPERATING PROCEDURES

1. Before operating the truck ····· 5-1
2. Check before operation ····· 5-2
3. Check before starting engine ····· 5-3
4. Seat adjustment ····· 5-7
5. Starting from a safe condition ····· 5-8
6. General starting and operating tips ····· 5-9
7. Starting the engine ····· 5-10
8. Check after starting engine ····· 5-11
9. Warming up operation ····· 5-13
10. Levers and pedals ····· 5-14
11. Traveling of the truck ····· 5-16
12. Operating safely ····· 5-20
13. Load handling ····· 5-22
14. Shut down procedure ····· 5-28
15. Storage ····· 5-29
16. Transport ····· 5-31
17. Loading and unloading by crane ····· 5-32

6. EMERGENCY PROCEDURES

1. How to tow a disabled truck ····· 6-1
2. Parking brake release ····· 6-3
3. How to use battery jumper cables ····· 6-4
4. Emergency fork lowering ····· 6-6
5. Key-lowering interlock ····· 6-7

7. PLANNED MAINTENANCE AND LUBRICATION

1. Introduction ····· 7-1
2. Safe maintenance practices ····· 7-2
3. Instructions before maintenance ····· 7-5
4. Planned maintenance intervals ····· 7-8
5. How to perform planned maintenance ····· 7-13
6. Service instruction····· 7-18
7. Electrical system ····· 7-41
8. Air conditioner and heater ····· 7-42
9. Replacement and check ····· 7-44
10. Handling truck in extremely hot places ····· 7-57
11. Cold weather operation ·····
7-58
12. Recommendation table for lubricants ····· 7-59
13. Fuel and lubricants ····· 7-60

8. SPECIFICATIONS

1. Specification table ····· 8-1
2. Specification for major components ····· 8-2
3. Tightening torque ····· 8-5

9. TROUBLESHOOTING

1. Engine system ····· 9-1
2. Electrical system ····· 9-3
3. Torque flow system ····· 9-4
4. Steering system ····· 9-8
5. Brake system ····· 9-9
6. Hydraulic system ····· 9-10
7. Mast and fork ····· 9-11

10. TESTING AND ADJUSTING

1. Engine system ····· 10-1
2. Drive system ····· 10-4
3. Travel system ····· 10-6
4. Steering system ····· 10-7

WARNING

CALIFORNIA PROPOSITION 65

Breathing diesel engine exhaust exposes you to chemicals known to the State of California to cause cancer and birth defects or other reproductive harm.

- Always start and operate the engine in a well-ventilated area.
- If in an enclosed area, vent the exhaust to the outside.
- Do not modify or tamper with the exhaust system.
- Do not idle the engine except as necessary.

For more information go to www.P65warnings.ca.gov/diesel.

91B1-07310

A MESSAGE TO HYUNDAI LIFT TRUCK OPERATORS

Lift trucks are specialized machines with unique operating characteristics, designed to perform a specific job. Their function and operation is not like a car or ordinary truck. They require specific instructions and rules for safe operation and maintenance.

Safe operation of lift trucks is of primary importance to HYUNDAI.
Our experience with lift truck accidents has shown that when accidents happen and people are killed or injured, the causes are:

- **Operator not properly trained**
- **Operator not experienced with lift truck operation**
- **Basic safety rules not followed**
- **Lift truck not maintained in safe operating condition**

For these reasons, HYUNDAI wants you to know about the safe operation and correct maintenance of your lift truck.

This manual is designed to help you operate your lift truck safely.
This manual shows and tells you about safety inspections and the important general safety rules and hazards of lift truck operation. It describes the special components and features of the truck and explains their function. The correct operating procedures are shown and explained. Illustrations and important safety messages are included for clear understanding. A section on maintenance and lubrication is included for the lift truck mechanic.

The operator's manual is not a training manual. It is a guide to help trained and authorized operators safety operate their lift truck by emphasizing and illustrating the correct procedures. However, it cannot cover every possible situation that may result in an accident. You must watch for hazards in your work areas and avoid or correct them. It is important that you know and understand the information in this manual and that you know and follow your company safety rules!
Be sure that your equipment is maintained in a safe condition. Do not operate a damaged or malfunctioning truck. Practice safe operation every time you use your lift truck. Let's join together to set high standards in safety.

Remember, before you start operating this lift truck, be sure you understand all driving procedures. It is your responsibility, and it is important to you and your family, to operate your lift truck safely and efficiently.

△ **Be aware that the Federal Occupational Safety and Health Act (OSHA) and state laws require that operators be completely trained in the safe operation of lift trucks; It is also an (OSHA) requirement that a machine inspection be performed before every shift. If you need training in operating or inspecting your lift truck, ask your supervisor.**

HYUNDAI lift trucks are built to take hard work, but not abuse. They are built to be dependable, but they are only as safe and efficient as the operator and the persons responsible for maintaining them. Do not make any repairs to this truck unless you have been trained in safe lift truck repair procedures and are authorized by your employer.

This manual describes procedures for operation, handling, lubrication, maintenance, checking and adjustment. It will help the operator realize peak performance through effective, economical and safe machine operation.

INTRODUCTION

HYUNDAI welcomes you to the growing group of professionals who own, operate and maintain HYUNDAI lift trucks. We take pride in the long tradition of quality products and superior value the HYUNDAI name represents. This manual familiarizes you with safety, operating, and maintenance information about your new lift truck. It has been specially prepared to help you use and maintain your HYUNDAI lift truck in a safe and correct manner.

Your HYUNDAI lift truck has been designed and built to be as safe and efficient as today's technology can make it. As manufactured, for some models, it meets all the applicable mandatory requirements of ANSI B56.1-1988 Safety Standard for Powered Industrial Trucks. Some trucks are also furnished with equipment to help you operate safety; for example, load back rest, parking brake and horn are standard equipment.

Safe, productive operation of a lift truck requires both skill and knowledge on the part of the operator. The operator must know, understand, and practice the safety rules and safe driving and load handling techniques described in this manual. To develop the skill required, the operator must become familiar with the construction and features of the lift truck and how they function, the operator must understand its capabilities and limitations, and see that it is kept in a safe condition.

Routine Servicing and Maintenance

Regular maintenance and care of your lift truck is not only important for economy and utilization reasons; it is essential for your safety. A faulty lift truck is a potential source of danger to the operator, and to other personnel working near it. As with all quality equipment, keep your lift truck in good operating condition by following the recommended schedule of maintenance.

Operator Daily Inspection - Safety and Operating Checks

A lift truck should always be examined by the operator, before driving, to be sure it is safe to operate. The importance of this procedure is emphasized in this manual with a brief illustrated review and later with more detailed instructions. HYUNDAI dealers can supply copies of a helpful **Drivers Daily Checklist.** It is an OSHA requirement.

Planned Maintenance

In addition to the daily operator inspection, HYUNDAI recommends that a planned maintenance and safety inspection program(PM) be performed by a trained and authorized mechanic on a regular basis. The PM will provide an opportunity to make a thorough inspection of the safety and operating condition of your lift truck. Necessary adjustments and repairs can be done during the PM, which will increase the lift or components and reduce unscheduled downtime and increase safety. The PM can be scheduled to meet your particular application and lift truck usage.

The procedures for a periodic planned maintenance program that covers inspections, operational checks, cleaning, lubrication, and minor adjustments are outlined in this manual. Your HYUNDAI dealer is prepared to help you with a Planned Maintenance Program by trained service personnel who know your lift truck and can keep it operating safely and efficiently.

Service Manual

In-depth service information for trained service personnel is found in Service Manual.

HOW TO USE THIS MANUAL

This manual is a digest of essential information about the safe operation, the features and functions and explains how to maintain your lift truck. This manual is organized into ten major parts:

Section 1. Safety hints, reviews and illustrates accepted practices for safe operation of a lift truck.

Section 2. Operating Hazards, warns of conditions that could cause damage to the truck or injury to the operator or other personnel.

Section 3. Know Your Truck, describes the major operating components, systems, controls, and other features of your truck and tells how they function.

Section 4. Operator Maintenance and Care, presents details on how to perform the operator's daily safety inspection and refuel the lift truck.

Section 5. Starting and Operating Procedures, discusses specific instructions on the safe, efficient operation of your lift truck.

Section 6. Emergency Starting and Towing, gives instructions for towing your truck in an emergency and for using battery jumper cables to start your truck in an emergency.

Section 7. Planned Maintenance and Lubrication, describes the PM (Planed Maintenance) program.

Section 8. Specifications, provides reference information and data on features, components, and maintenance items.

Section 9. Troubleshooting, provides trouble symptoms, causes and methods of remedy.

Section10. Testing and Adjusting, gives instructions for testing and adjusting.

※The descriptions and specifications included in this manual were in effect at the time of printing. HYUNDAI reserves the right to make improvements and changes in specifications or design, without notice and without incurring obligation. Please check with your authorized HYUNDAI dealer for information on possible updates or revisions.

The examples, illustrations, and explanations in this manual should help you improve your skill and knowledge as a professional lift truck operator and take full advantage of the capabilities and safety features of your new lift truck.

The first section of the manual is devoted to a review, with illustrations and brief messages, of general safety rules and the major operating hazards you can encounter while operating a lift truck. Next, you will find description's of the components of your specific lift truck model and how the instruments, gauges, and controls operate. Then, you will find a discussion of safe and efficient operating procedures, followed by instruction's on how to tow a disabled lift truck. The later sections of the manual are devoted to maintenance and truck specifications.

Take time to carefully read the **Know Your Truck** section. By acquiring a good basic understanding of your truck's features, and how they function, you are better prepared to operate it both efficiently and safely.

In **Planned Maintenance**, you will find essential information for correct servicing and periodic maintenance of your truck, including charts with recommended maintenance intervals and component capacities. Carefully follow these instructions and procedures.

Each major section has its own table of contents, so that you can find the various topics more easily.

We urge you to first carefully read the manual from cover to cover. Take time to read and understand the information on general safety rules and operating hazards. Acquaint yourself with the various procedures in this manual. Understand how all gauges, indicator lights, and controls function. Please contact your authorized HYUNDAI dealer for the answers to any questions you may have about your lift truck's features, operation, or manuals.

Operate your lift truck safely; careful driving is your responsibility.
Drive defensively and think about the safety of people who are working nearby. Know your truck's capabilities and limitations. Follow all instructions in this manual, including all symbols (⚠, △,※) and messages to avoid damage to your lift truck or the possibility of any harm to yourself or others.

This manual is intended to be a permanently attached part of your lift truck. Keep it on the truck as a ready reference for anyone who may drive or service it. If the truck you operate is not equipped with a manual, ask your supervisor to obtain one and have it attached to the truck. And, remember, your HYUNDAI dealer is pleased to answer any questions about the operation and maintenance of your lift truck and will provide you with additional information should you require it.

※ **Illustrations may differ from your truck, but they are applicable to your truck.**

EC REGULATION APPROVED

· Noise level (2000/14/EC and EN 12053) are as followings.

Model	L_{WA} (EU only)	L_{PA}
100D-9V	108 dB	77.3 dB

· The value of vibrations transmitted by the operator's seat are lower than standard value of (2005/88/EC)

SAFETY LABELS

1. LOCATION

Always keep these labels clean. If they are lost or damaged, attach them again or replace them with a new label.

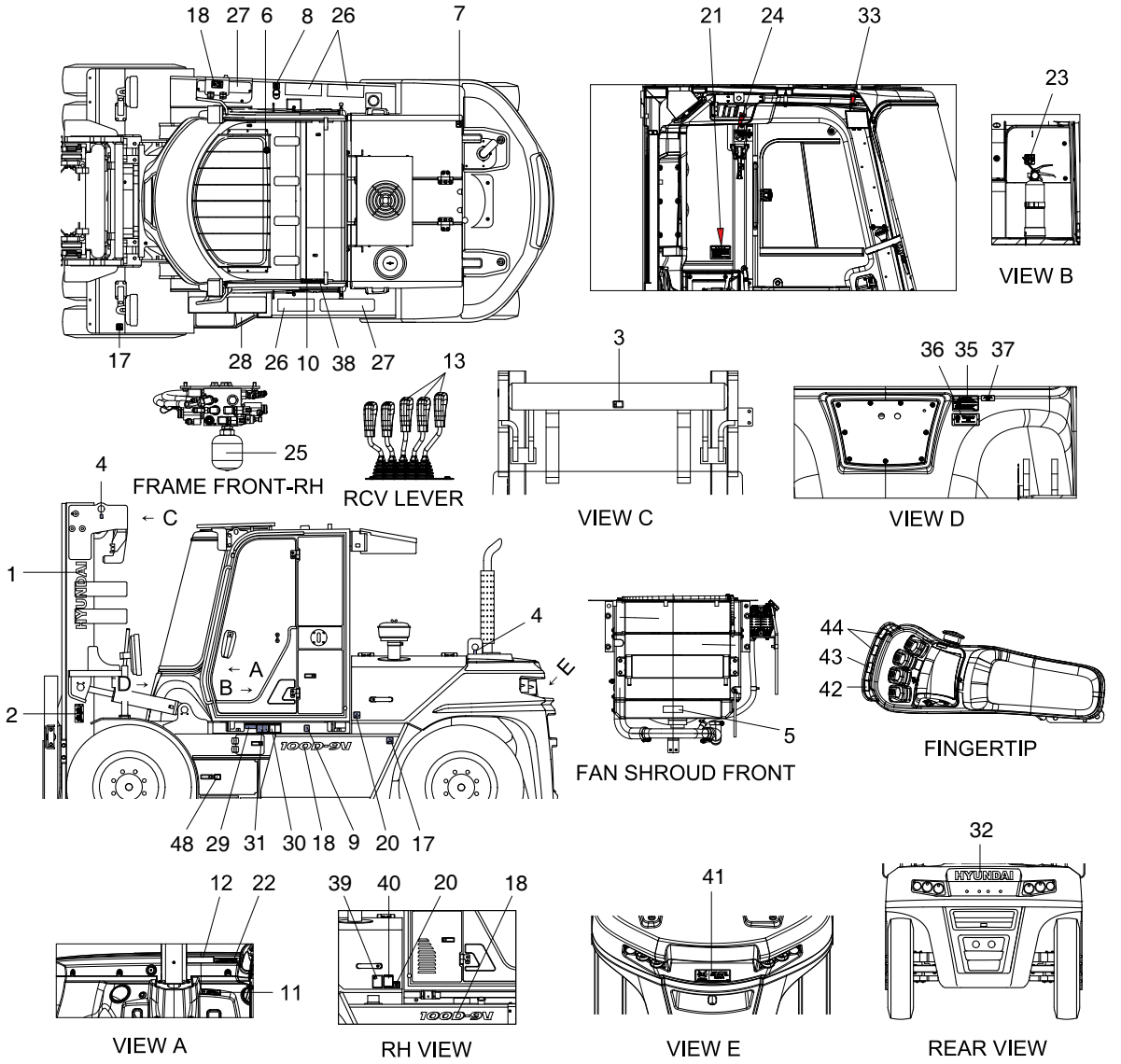

1	HYUNDAI logo	18	Model name	32	HYUNDAI logo
2	Mast warning	19	DEF (UREA)	33	Name plate
3	Hand caution	20	Engine room	34	Turbo charger cover
4	Hook	21	Safety instruction	35	EMC
5	Radiator & fan	22	Parking brake	36	California proposition 65
6	Start key	23	Fire extinguisher	37	UL regulation - Label D
7	Temperature	24	Hammer	38	OHG label
8	Diesel fuel	25	Accumulator	39	Noise
9	Hydraulic oil	26	Safety work	40	Refrigerant regulation
10	Warning safety	27	Safety work	41	SCR
11	Start caution	28	Safety work	42	Fork lift
12	Solid tire	29	Tilt cabin warning	43	Fork tilt
13	Attachment (option)	30	Cabin tilt lock	44	Attachment (option)
17	Tire	31	Waring cabin tilt	48	Battery box

2. DESCRIPTION

There are several specific warning labels on this truck please become familiarized with all warning labels.

Replace any safety label that is damaged, or missing.

1) MAST WARNING (item 2)

This label is positioned on the both side of the mast.

⚠ **Never stand or work under the raised forks at any circumstances without supporting with block.**

⚠ **In case of working under the forks, it is essential to support the carriage with blocks.**

2) HAND CAUTION (item 3)

This label is positioned on the center side of the mast cross plate.

⚠ **It warns of the danger of injury from movement between rails, chains, sheaves, fork carriage, and other parts of the mast assembly. Do not climb on or reach into the mast. Personal injury will result if any part of your body is put between moving parts of the mast.**

3) HOOK (item 4)

This label is positioned on the both top side of mast and lifting bracket of the both side of the main frame.

⚠ **Refer to page 5-32 for safe loading procedures.**

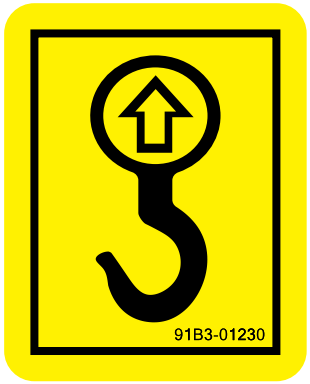

4) **RADIATOR & FAN** (item 5)

This label is positioned on the cooling fan shroud of the radiator.

⚠ It warns of the danger or injury from spinning fan blades and forbid so open the cap of the surge tank because operator might get scalded due to spouting of hot water.

⚠ When the engine is running, be sure that you keep your hands, fingers, arms, and clothing away from a spinning fan.

⚠ Don't stand in line with a spinning fan. Fan blades can break at excessively high rpm and be thrown out of the engine compartment.

Never open the surge tank cap while engine running or at high coolant temperature.

5) **TEMPERATURE** (item 7)

This label is positioned on the top side of the RH cover.

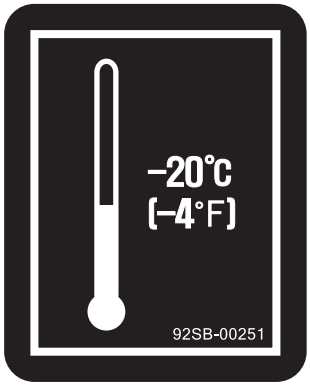

⚠ Coolant must be checked as specified in the maintenance chart.

6) **DIESEL FUEL** (item 8)

This label is positioned on the top side of the fuel tank.

※ Fill only ultra low sulfer diesel.
※ Do not fill the gasoline.
※ Diesel engine must be operated only on commercially available diesel fuel that complies with EU standard or international standard. Do not use marine diesel fuel, heating oils, or non-approved fuel additives, as this will increase wear and cause damage to the engine and fuel system. The use of non-approved fuels and / or fuel additives will result in a limitation of your warranty rights.
※ If the engine is to be operated within the union on diesel or non-road gas-oil, a fuel with sulphur content not greater than 10 mg/kg (20 mg/kg at point of final distribution) and a FAME content not greater than 8 % v/v shall be used. Cetane number of 45 is minimum. Cetane number greater than 50 is preferred, especially for temperatures below -20℃ (-4°F) or elevations above 1500 m (5000 ft).

7) **HYDRAULIC OIL** (item 9)

This label is positioned on the left side of the frame.

※ Fill only the hydraulic oil.
※ Do not fill the diesel fuel.

8) WARNING SAFETY (item 10)

This label is positioned on the top side of LH rear cover of the cabin inside.

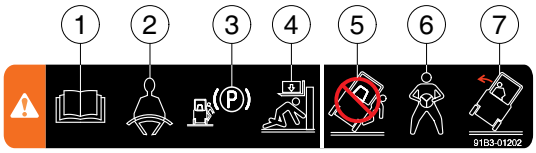

① Refer to operator's manual in detail.
② Always buckle up the seat belt for safety operation.
③ When the operator get off the truck, always press the parking brake switch so that the truck can keep with stopping condition.
④ The people should not pass through under forks and other attachments which are lifted or being lifted.
⑤ Do not jump down from the truck. It can be caused that the operator have severe injury or death in the event of a tip over.
⑥ Outstretch the legs as widely as possible and grasp firmly the steering handle.
⑦ Lean the body to the opposite direction in order to avoid severe injury or death when the truck is tipped over.

⚠ Safety and warning labels are placed in conspicuous locations on the truck to remind you of essential procedures or to prevent you from making an error that could damage the truck or possibly cause personal injury. You should know, understand, and follow these instructions. Safety and warning labels. Should be replaced immediately if missing or defaced (Damaged or illegible). Refer to page 0-6 of this manual for the location of all labels.

⚠ Operator/Tip-over warning label

This label is located on the upper left side of the drivers overhead. Its purpose is to remind the operator that staying in the seat provides the best chance of avoiding injury in the event of a truck-tipping or driving off a dock mishap.

Lift trucks can be tipped over if operated improperly. Experience with lift truck accidents has shown that the driver cannot react quickly enough to jump clear of the truck and overhead guard as the truck tips. To protect operators from severe injury or death in the event of a tip over, it is best to be held securely in the seat. So, please, always buckle up when driving your lift truck.

9) START CAUTION (item 11)

This label is located on the right side of the dashboard.

Warnings before leaving the operator seat.
① Be sure to lower the attachment to the ground.
② Apply the parking brake.

91FH-00343

10) **SOLID TIRE** (Item 12)

This label is located on the right top side of the dashboard.

※ **When "solid tires" are equipped.**

(1) Do not travel more than 25 kph (16 mph).
(2) Do not travel further than 8 km (5 miles) in an hour.
(3) Do not drive on the road for automobile.
(4) Be sure to check wheel nut tightness every 50 hours.
(5) Retighten the wheel nuts after the first 10 hours after changing the wheel.

⚠ **The durability of the solid tire is not guaranteed with non-compliance.**

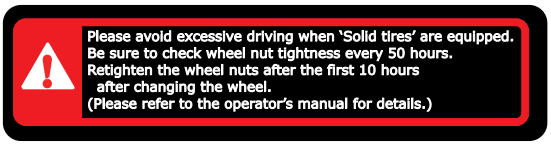

97HN-00911

11) **TIRE PRESSURE** (Item 17)

This label is positioned on the top side of the front left fender and rear left side of the frame.

⚠ **Tire pressure must be checked in accordance planned maintenance intervals.**

⚠ **Refer to page 5-3 for the regulated tire air pressure (A and B).**

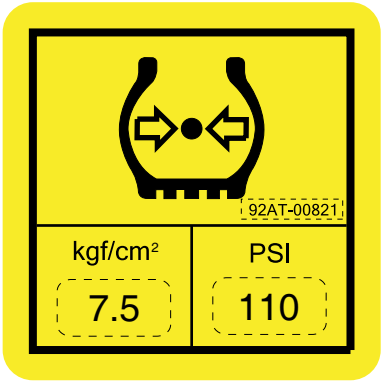

92AT-00801

12) **DEF (UREA)** (Item 19)

This label is positioned on the cover of the DEF / AdBlue® tank of the right side of the frame.

※ **Fill the DEF / AdBlue® only.**
※ **Never use diesel oil.**

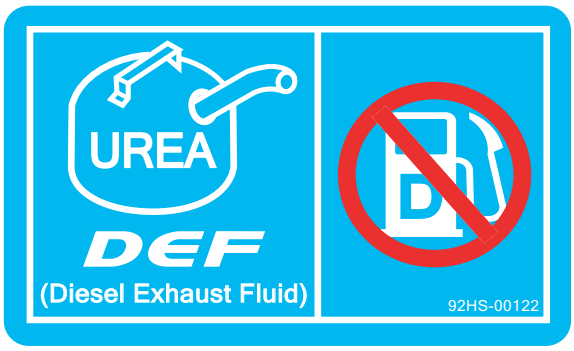

13) **ENGINE ROOM** (Item 20)

This label is positioned on the door cover of the LH and RH side.

⚠ **Do not wash the engine room.**

14) **SAFETY INSTRUCTION** (item 21)

This label is positioned on the inside of the rear left side of the cabin if the truck is equipped with *OPSS.

⚠ This forklift is equipped with an operator existence sensing system per ISO 3691.

- Powered travel movement of the truck shall be possible only if the operator is in the normal operating position. Transmission will automatically shift to neutral upon the exiting of the operator.
- The gear selector lever must be cycled through neutral with the operator in the normal operating position to regain powered direction control.
- Control of mast tilting, lifting and lowering is not possible through operation of the appropriate control when the operator is not in the normal position.

Truck for travel and mast *OPSS

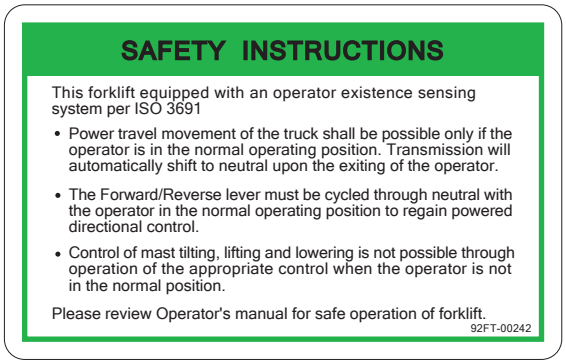

92FT-00242

*OPSS : Operator Presence Sensing System

15) **PARKING BRAKE** (item 22)

This label is located on the right top side of the dashboard.

※ Refer to page 6-3 to release the parking brake manually for emergency towing.

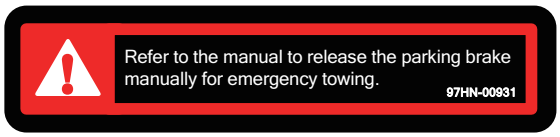

16) **FIRE EXTINGUISHER** (item 23)

This label is positioned on the inside of the left rear side of the cabin.

※ Read and understand the instructions adhered label on the fire extinguisher.

17) **HAMER** (Item 24)

This label is positioned on the inside of the left stay of the cabin.

※ **The rear window serves as an alternate exit.**

※ **To remove the rear window, pull the ring and push out the glass.**

18) **ACCUMULATOR** (item 25)

This label is positioned on the accumulator of the cutoff solenoid valve.

※ **The accumulator is filled with high-pressure nitrogen gas, and it is extremely dangerous if it is handled in the wrong way. Always observe the following precautions.**

⚠ **Never make any hole in the accumulator expose it to flame or fire.**

⚠ **Do not weld anything to the accumulator.**

※ **When carrying out disassembly or maintenance of the accumulator, or when disposing of the accumulator, it is necessary to release the gas from the accumulator. A special air bleed valve is necessary for this operation, so please contact your Hyundai distributor.**

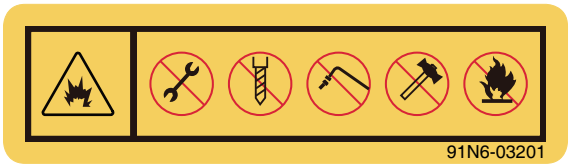

91N6-03201

19) **TILT CABIN WARNING** (Item 29)

This label is positioned on the left side of the frame.

⚠ **When tilting the cab for service, the cab must be fully extened up or down.**

(1) To rasie cab, depress the switch down untill fully raised.

(2) To lower cab, depress switch down untill fully lowered.

(3) Do not tilt cab when door opened.

⚠ **Do not change the directional change lever manually when opening cab.**

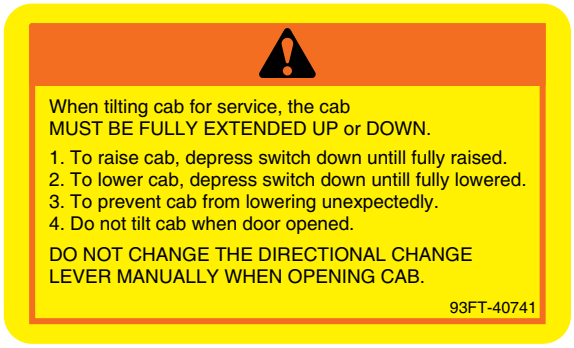

20) **CABIN TILT LOCK** (Item 30)

This label is positioned on the left side of the frame.

(1) Release the cabin tilt lock assembly by turning the tilt lever to the UNLOCK position before tilting the cabin.

(2) Lock the cabin tilt lock assembly by turning the tilt lever to the LOCK position after the cabin original position.

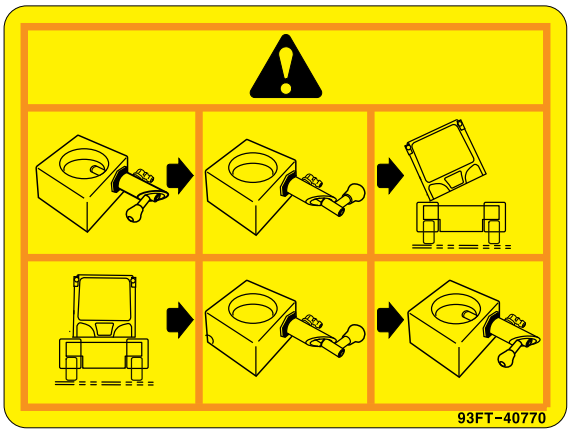

21) **WARNING CABIN TILT** (Item 31)

This label is positioned on the left side of the frame.

⚠ **Refer to page 7-16 for safe tilting procedure.**

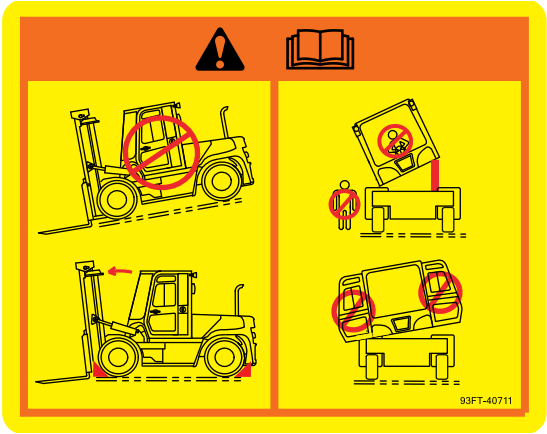

22) **EMC** (item 35)

This label is positioned on the front outside of the dashboard.

※ **This machine complies with the EMC directive ICES-002.**

※ **EMC : ElectroMagntic Compatibility**

CAN ICES-002

NMB-2

91K4-14150

23) **CALIFORNIA PROPOSITION** (item 36)

This label is positioned on the front outside of the dashboard.

⚠ **Breathing diesel engine exhaust exposes you to chemicals known to the State of California to cause cancer and birth defects or other reproductive harm.**

(1) Always start and operate the engine in a well-ventilated area.

(2) If in an enclosed area, vent the exhaust to the outside.

(3) Do not modify or tamper with the exhaust system.

(4) Do not idle the engine except as necessary.

※ **For more information go to www.P65warnings.ca.gov/diesel.**

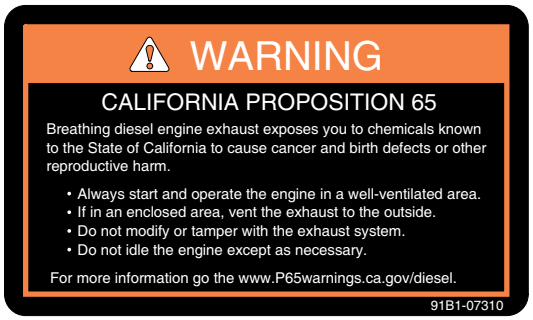

91B1-07310

24) **NOISE** (Item 39)

This label is located on the door cover of the LH side.

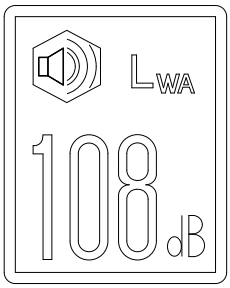

92FT-00350

25) **REFRIGERANT REGULATION** (item 40)

This label is located on the door cover of the LH side.

⚠ **Inhalation of A/C refrigerant gas in any form can result in serious injury or death.**

※ **Refer to page 7-52.**

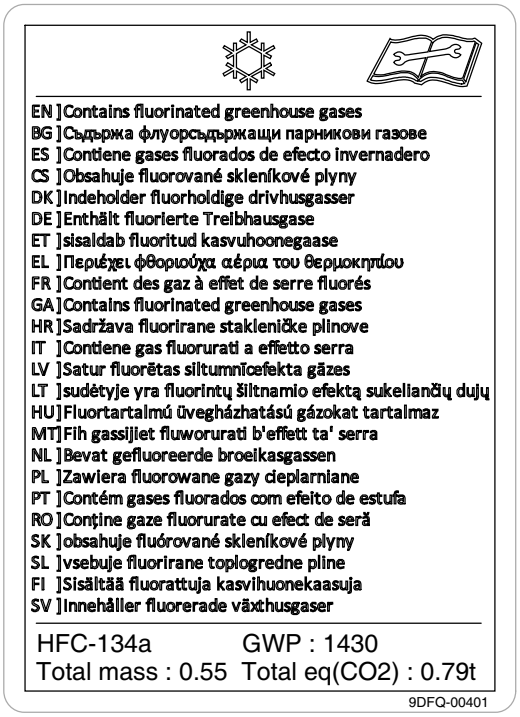

9DFQ-00401

26) SCR (item 41)

This label is located on the rear side of the counterweight.

⚠ Do not touch the aftertreatment device or it may cause severe burn. When the engine is running or immediately after engine shut down.

※ SCR : Selective Catalytic Reduction

92HV-00180

1. DIRECTION

The directions of this truck indicate forward, backward, right and left when truck is in the travelling direction.

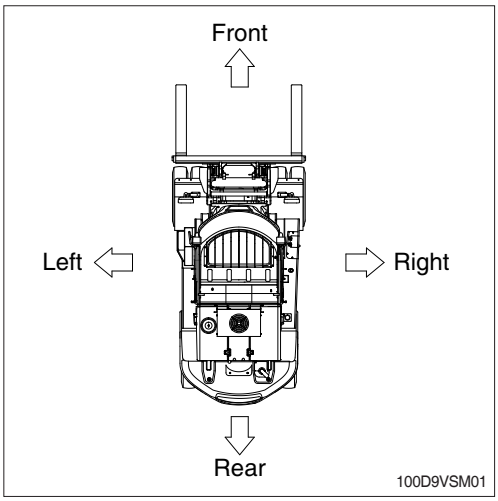

2. SERIAL NUMBER

Inform following when you order parts or the truck is out of order.

1) TRUCK SERIAL NUMBER

It is shown on the right fender.

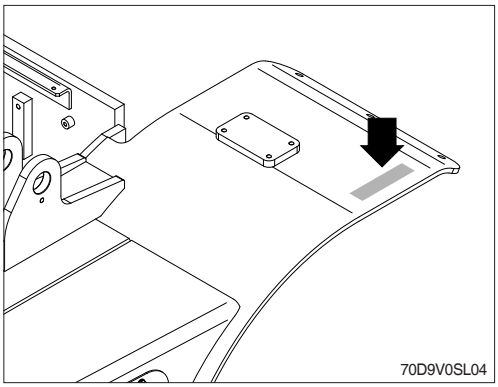

2) ENGINE SERIAL NUMBER

The numbers are located on the engine name plate.

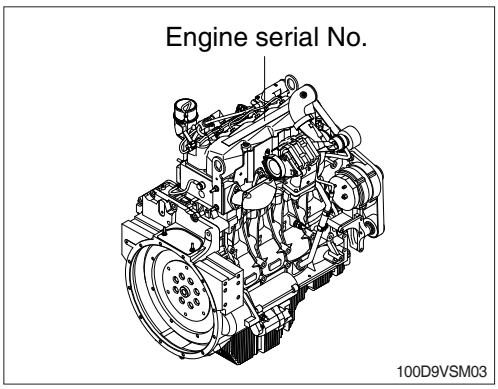

3. SYMBOLS

⚠ Important safety hint.

△ It indicates matters which can cause the great loss on the truck or the surroundings.

※ It indicates the useful information for operator.

1. DAILY INSPECTION

At the beginning of each shift, inspect your truck and fill out a check, maintenance and lubrication table.

Check for damage and maintenance problems.

Have repairs made before you operate the truck.

Do not make repairs yourself. Lift truck mechanics are trained professionals. They know how to make repairs safely.

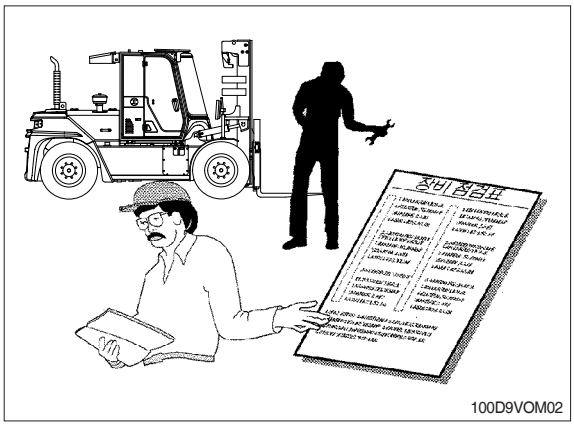

100D9VOM02

2. DO'S AND DON'TS

Do watch for pedestrians.

Do wear safety equipment when required.

Do not mix drugs or alcohol with your job.

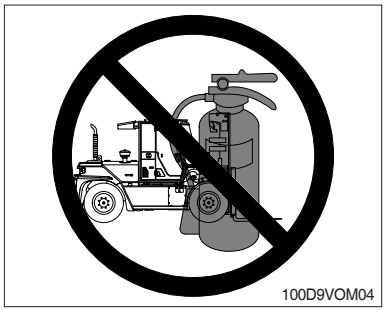

Do not block safety or emergency equipment.

Do not smoke in NO SMOKING areas or when refueling.

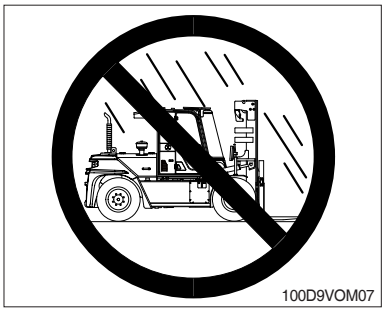

Do not operate the truck outdoors in rainy day.

※Exclude the truck equipped cabin.

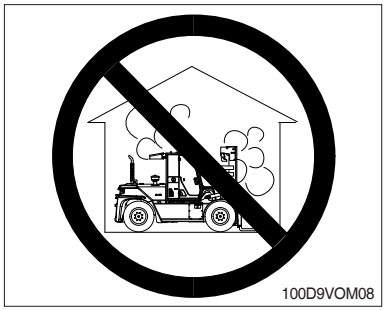

Exhaust gas is dangerous.
Do not operate the truck at the inhouse, if possible.
Provide adequate ventilation when working in a closed space.

3. SEAT BELT

⚠ Always buckle up for the truck equipped with safety belt.

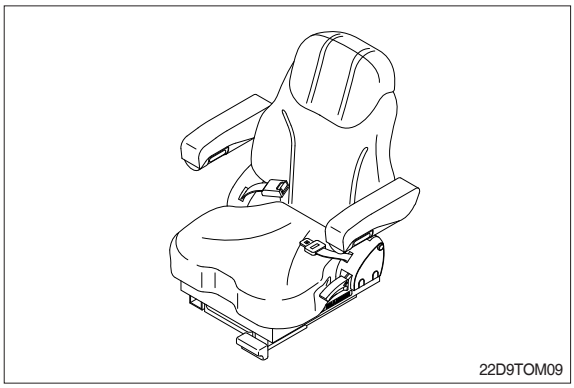

⚠ Seat belts can reduce injuries.

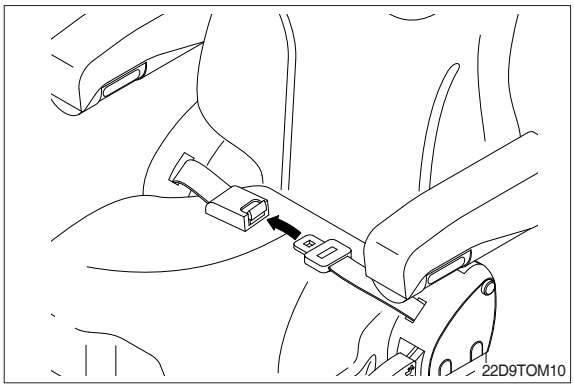

4. NO RIDERS

1) The operator is the only one who should be on a truck.

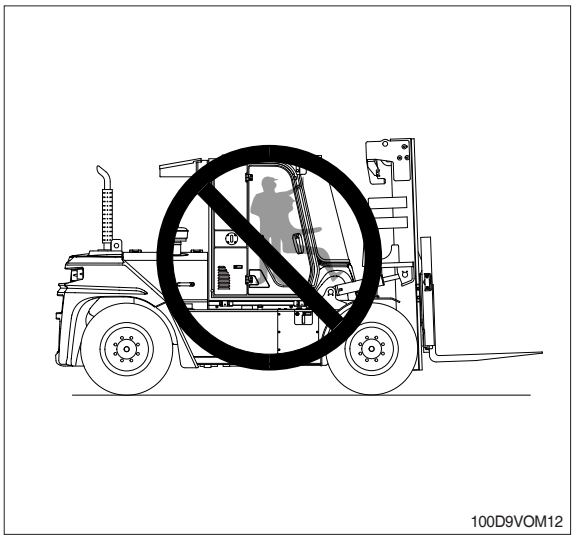

2) Never transport personnel on the forks of a lift truck.

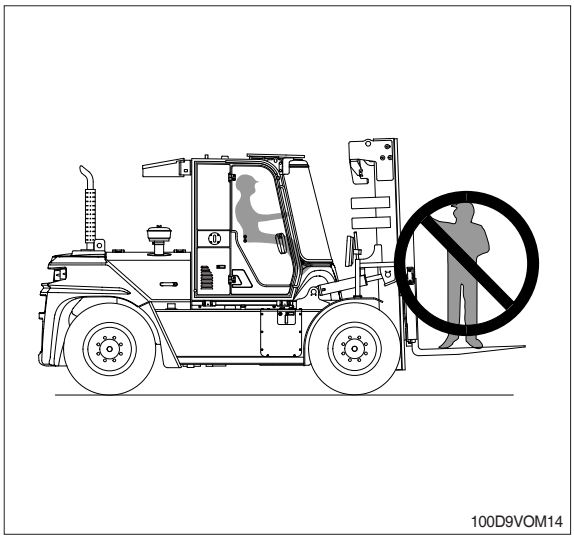

5. PEDESTRIANS

1) Watch where you are going. Look in the direction of travel. Pedestrians may use the same roadway you do. Sound your horn at all intersections or blind spots.

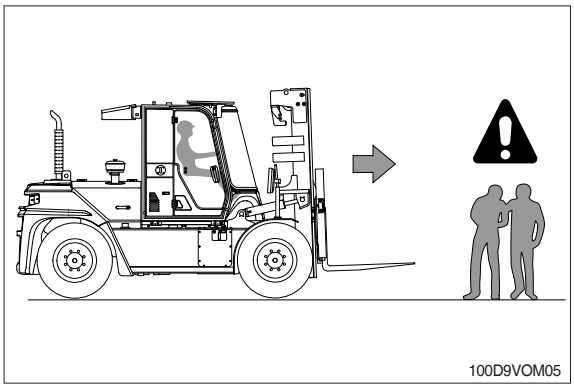

2) Watch for people in your work area even if your truck has warning lights or alarms. People may not watch for you.

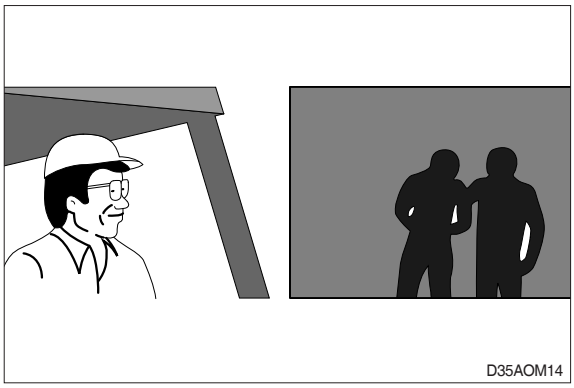

3) Watch for people standing back, even when you are parked.

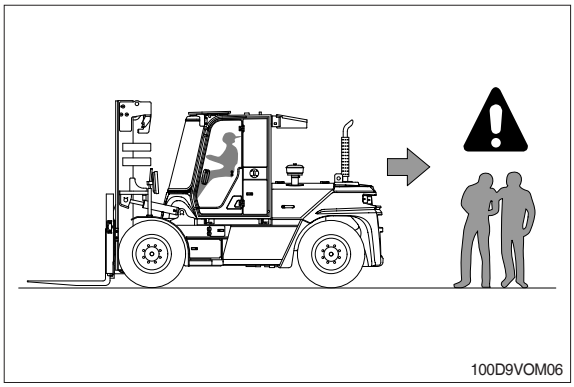

6. OPERATOR PROTECTION

1) Stay inside the cabin.

2) Always keep your body within the confines of the truck.

⚠ **Do not operate truck without cabin or overhead guard, unless condition prevent use of it.**

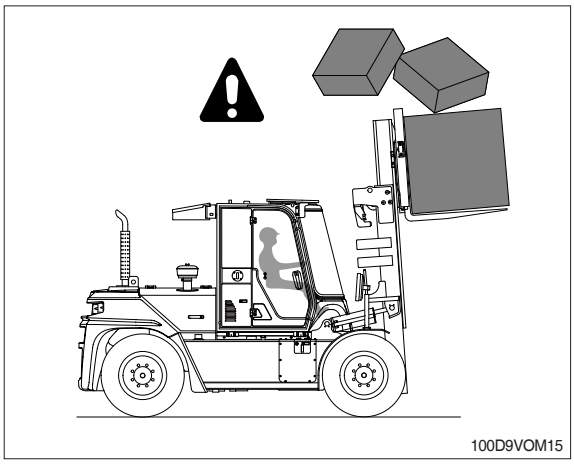

7. FORK SAFETY

Never allow anyone to walk under raised forks.

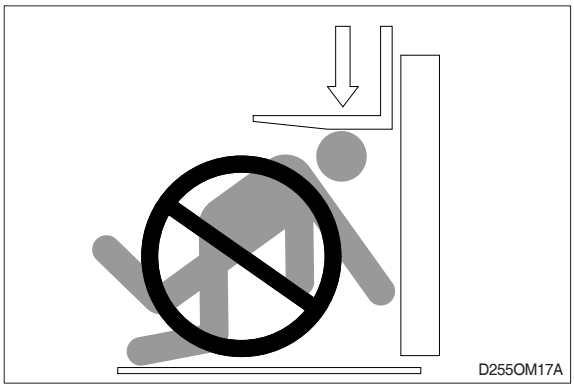

There is special equipment to raise people for overhead work.
DO NOT USE LIFT TRUCKS.

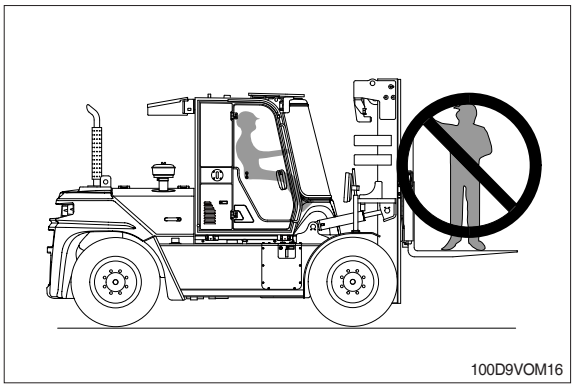

Always lower the load slowly.
Raise and lower with mast vertical or tilted slightly back(Never forward).

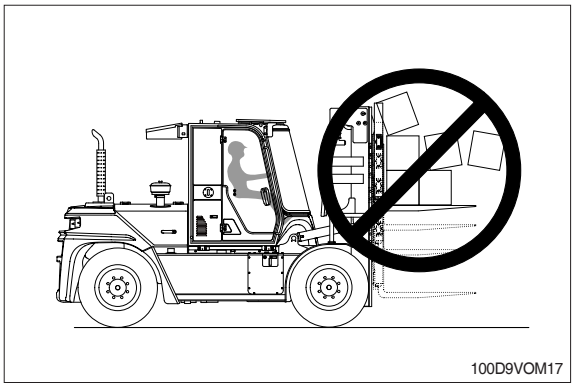

8. PINCH POINTS

⚠ Keep hands, feet and legs out of the mast.

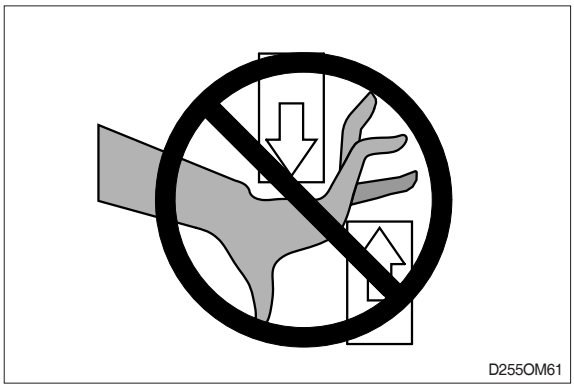

⚠ Do not use the mast as a ladder.

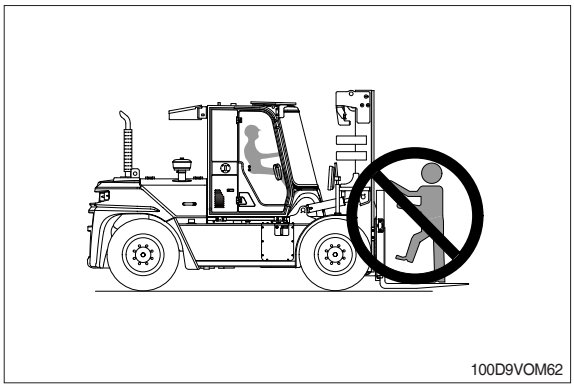

⚠ Never try to repair the mast, carriage, chain, or attachment by yourself. Always get a trained mechanic.

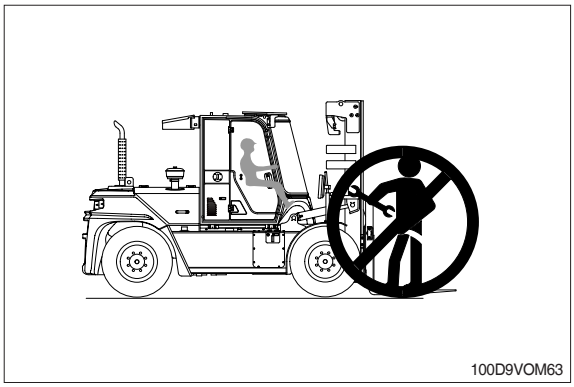

9. TRAVEL

1) Travel with the load near the floor and the ground, with mast tilted back to cradle the load whenever possible.

⚠ **Never lift or lower the load when the truck is in motion.**

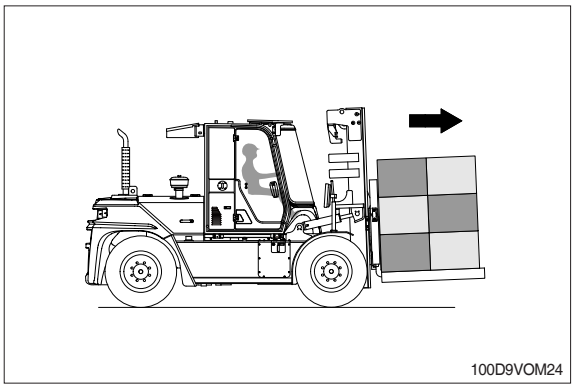

2) When handling bulky loads that restrict your vision operate your truck in reverse to improve visibility. Be sure to pivot in the seat to give maximum visibility.

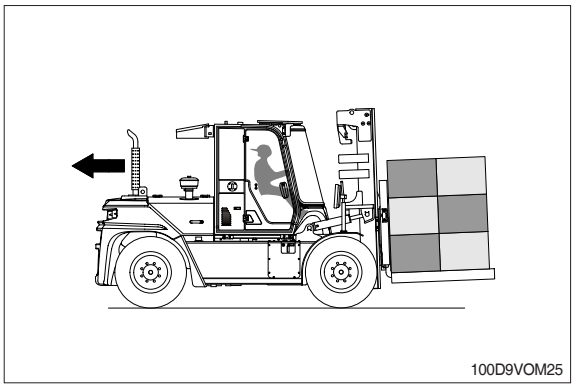

3) Unstable loads are a hazard to you and to your fellow workers. Always make certain that the load is well stacked and evenly positioned across both forks. Never attempt to lift a load with only one fork.

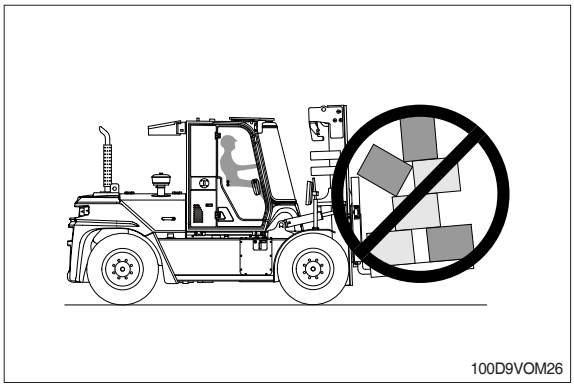

10. GRADES, RAMPS, SLOPES, AND INCLINES

⚠ Never turn on a grade, either loaded or unloaded.

1) Unloaded-Forks downgrade

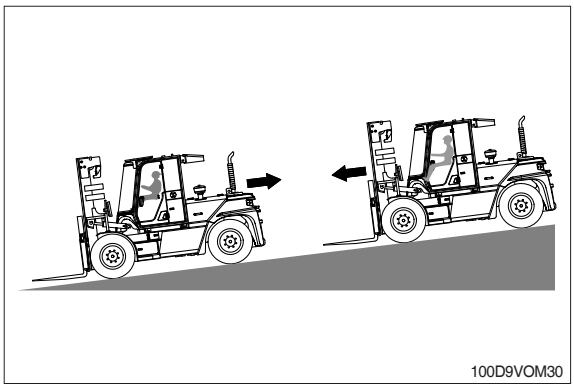

2) Loaded - Forks upgrade

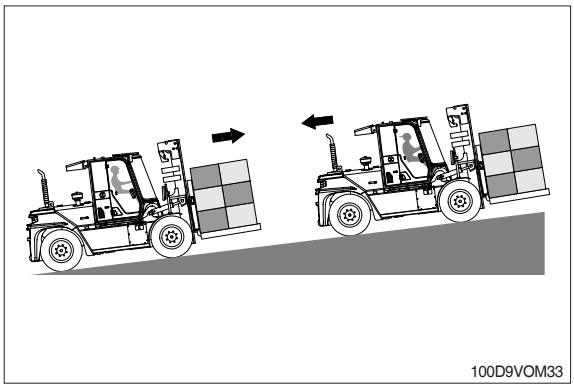

11. TIP OVER

1) LATERAL TIP OVER

(1) Lateral tip over can occur with a combination of speed and sharpness of turn. This combination will exceed the stability of the truck. This condition is even more likely with an unloaded truck.

(2) With the load or mast raised, lateral tip over can occur while turning and/or braking when traveling in reverse or accelerating and turning while traveling forward.

(3) Lateral tip over can occur loaded or unloaded by turning on an incline or ramp.

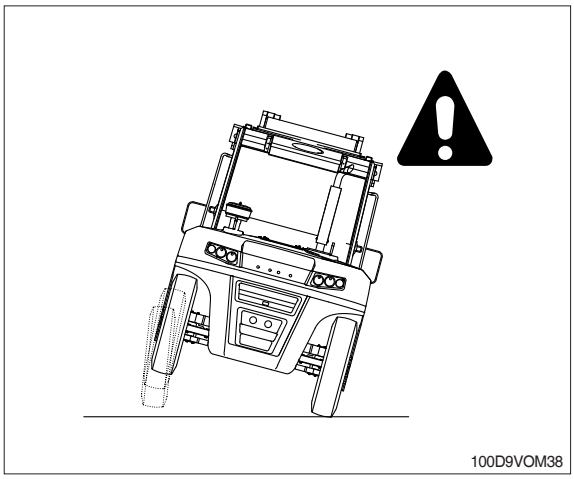

2) LONGITUDINAL TIP OVER

(1) Longitudinal tip over can occur with combination of overloading and load elevated also with capacity load and elevated. This combination will exceed the stability of the truck. This condition is even more likely with excessive forward tilt, braking in forward travel or accelerating rearward.

(2) Longitudinal tip over can occur by driving with the load down slope on a steep grade.

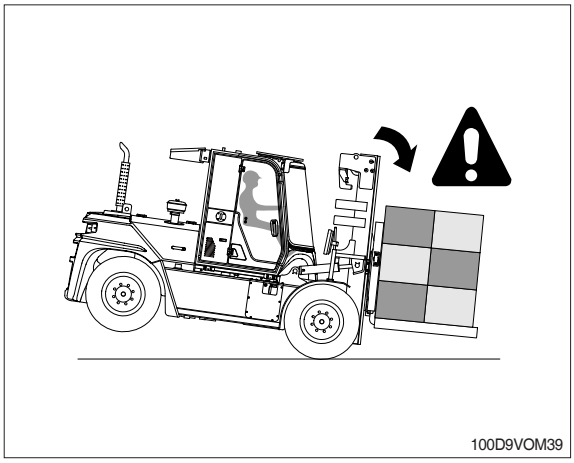

Lateral and longitudinal tip over can occur if the truck is driven over objects on the floor or ground, off the edge of improved surfaces, or into potholes in the road surface, or by running into overhead objects or collisions.

An off dock type of tip over can occur if the truck is steered too close to the dock edge, driven off the edge of the dock or ramp, or if the highway truck or trailer rolls away from the dock or is driven away during loading.

⚠ **The conditions listed above can be further aggravated by overloading, excessive tilt, or off center loads.**

⚠ **Lift truck tip over can cause serious injury or death if the operator is trapped between the truck and the ground.**

3) WHAT TO DO IN CASE OF A TIP OVER

⚠ If your truck starts to tip over, do not jump.

⚠ Brace yourself as illustrated right.

1. Make sure your seat belt is fastened securely, if the truck is equipped with seat belt.
2. Stay in your seat.
3. Grip the wheel.
4. Brace your feet.

⚠ Your chances for survival in a tip-over are better if you stay with the truck, in your seat.

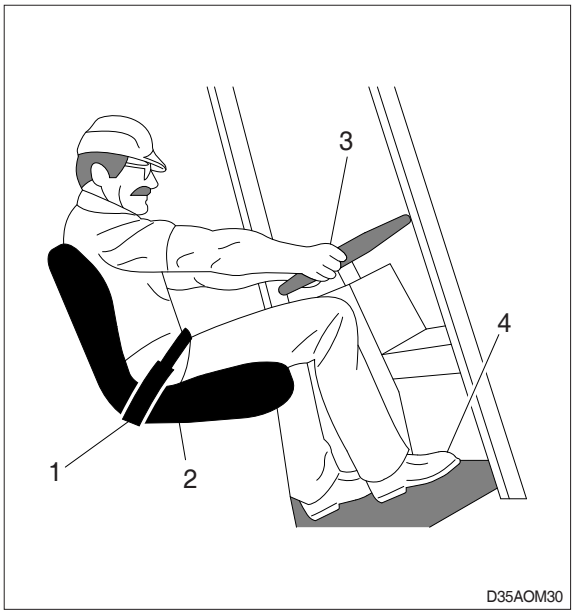

12. SURFACE AND CAPACITY

Avoid these conditions. They can cause a truck to tip over or lose traction for braking or driving.

⚠ **Know the weight of your truck and load. Especially when using elevators, know the capacity of the elevator you intend to use. Do not overload.**

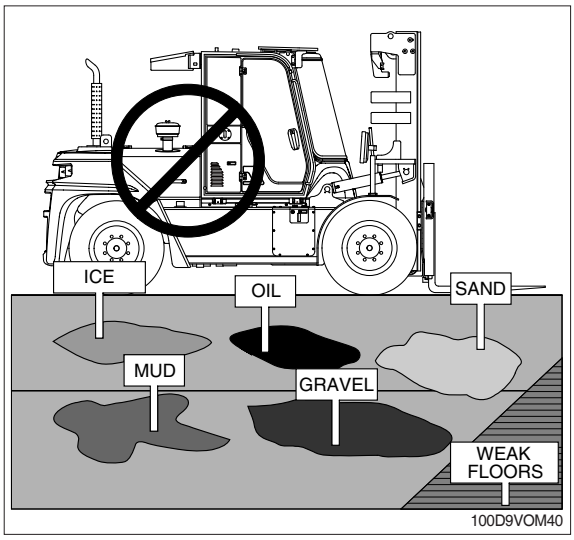

TIPOVER

⚠ **Seat belts can reduce injuries. ALWAYS BUCKLE UP**

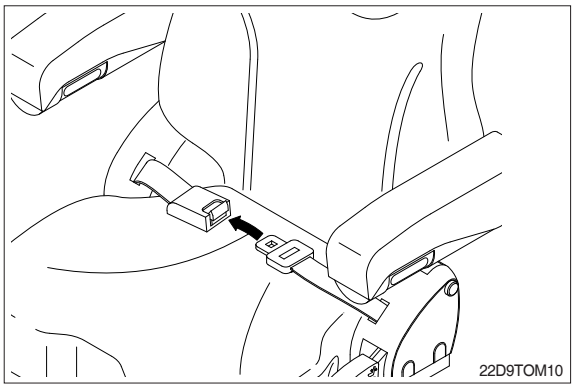

13. PARKING

1) Never park on a grade.

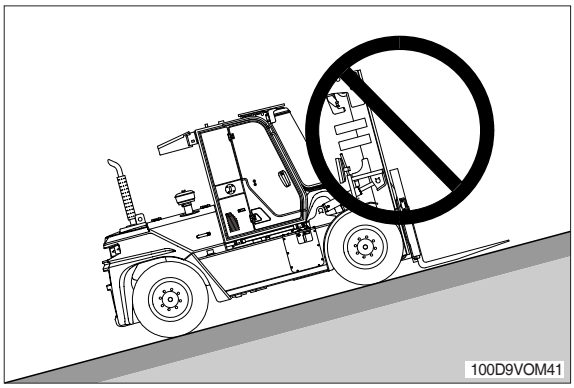

2) Always come to a complete stop before leaving the truck. Be sure the travel control is in NEUTRAL.

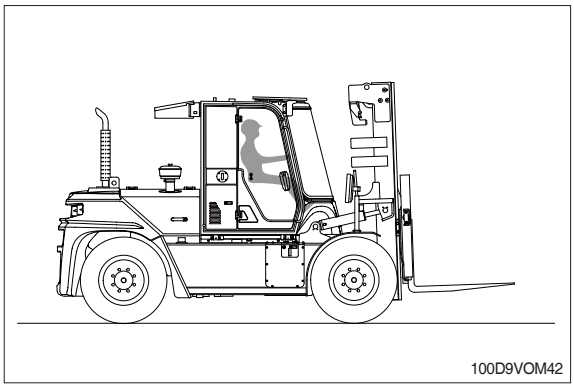

3) Lower forks fully to floor and tilt forward.

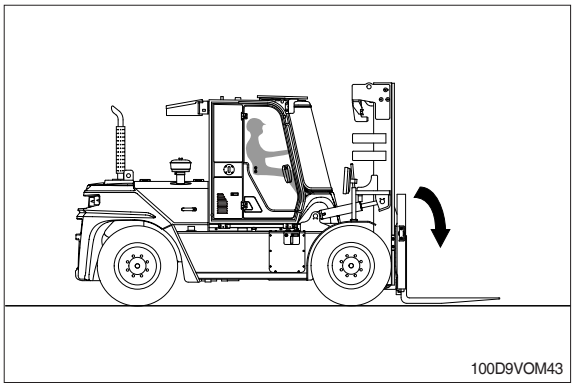

4) Set the parking brake.
   Position 1 : Release
   Position 2 : Lock

5) Turn key to OFF position.

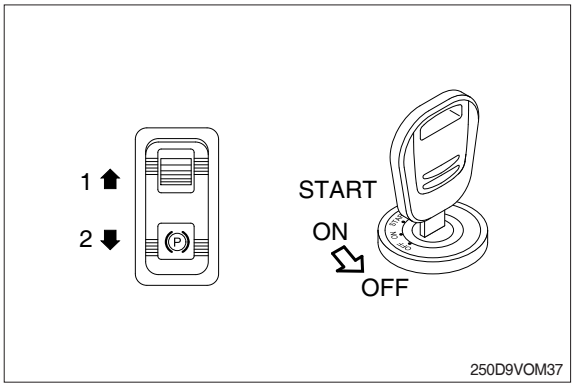

14. REFUELING

1) Before adding oil, check around the truck for oil leakage.

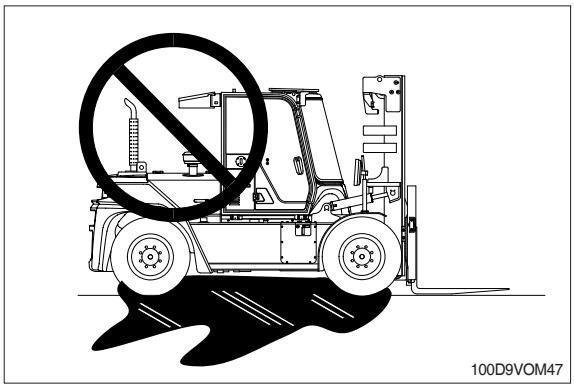

2) Keep away from fire when adding oil or during operation.

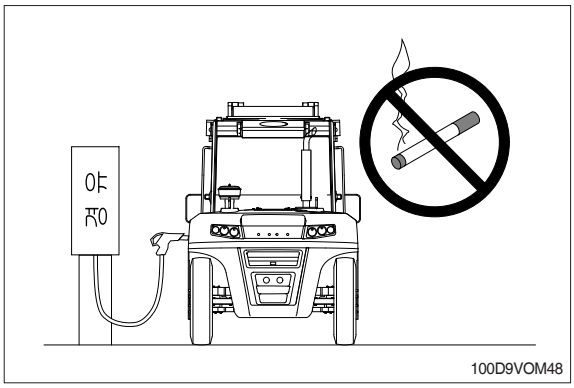

3) After adding oil, wipe off any oil spilled on the truck.

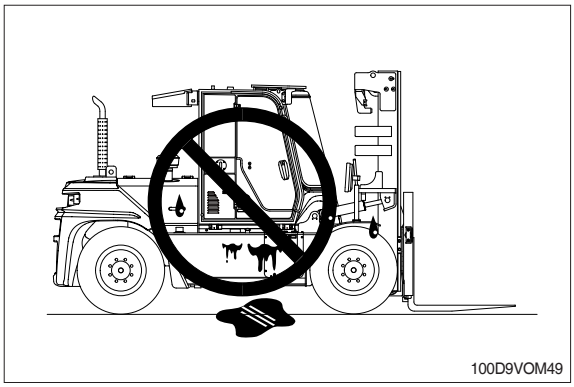

15. STEP

1) When getting on or off the truck, use the step provided.

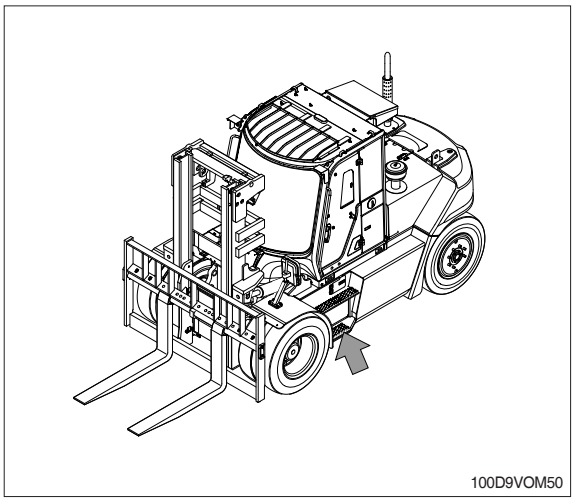

2) Do not jump up or down from the truck.

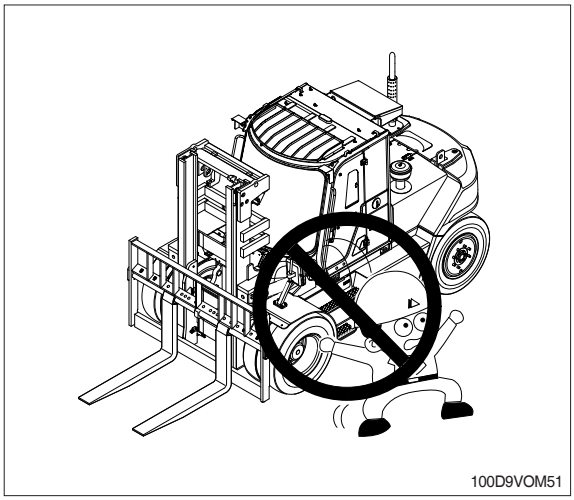

16. OPERATOR'S SAFETY RULES

1) All operational functions require that the operator be seated in the operator's seat.

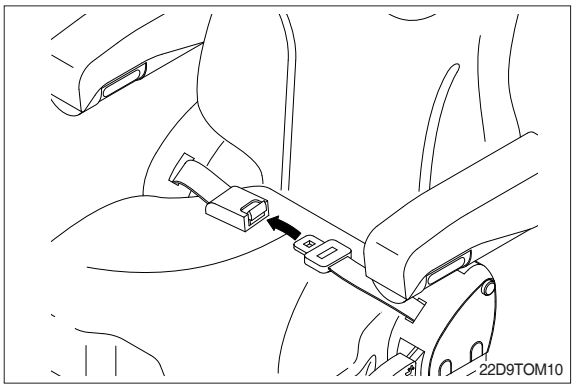

⚠ **Always buckle up if a seat belt is provided.**

⚠ **Forklift will not operate if the seat belt is not fastened.**
Intentionally unfastening the seat belt during operation safety shuts the forklift down.
This system protects the operator from accidents and injuries that may take place when the seat belt is not worn.

2) The parking brake must be locked in the PARK POSITION before exiting from the truck.

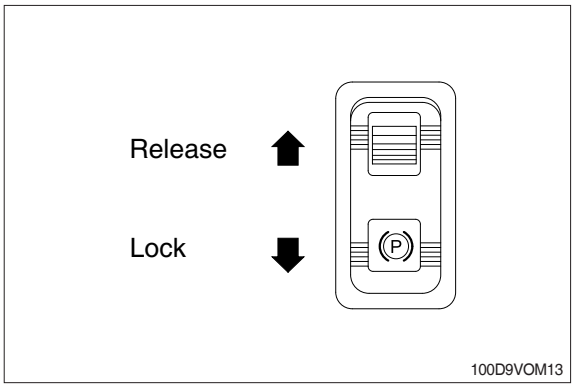

⚠ **The parking brake must remain locked in the lock position except when an operator is in the normal operating position.**

3) ISO REGULATIONS (TRUCK FOR EQUIPPED WITH A *OPSS)

⚠ **This forklift truck is equipped with an Operator Existence Sensing System per ISO 3691.**

(1) Traction safety warning

① This function works when the start switch is ON or START position.
② The transmission(power automatically cutoff) in 2 seconds from the driver's off the seat.
③ At the same time, the warning lamp ON and alarm will sound intermittently if the gear selector lever was not returned to neutral.
④ To release the function, the gear selector lever must be cycled through neutral with the operator in the normal operating position to regain powered directional control.

(2) Parking brake warning

① This function works when the start switch is not only ON or START position but also OFF position.
② Alarm sounds in 2 seconds from the driver's off the seat with the parking brake released.
③ To release the function, the parking brake switch must be turned to ON (PARK) position.
④ When the start switch is OFF position, alarm will sound only for 30 seconds .

*OPSS : Operator Presence Sensing System

17. SIDE SHIFT AND FORK POSITIONER (OPTION)

⚠ Do not put side loads on the forks.

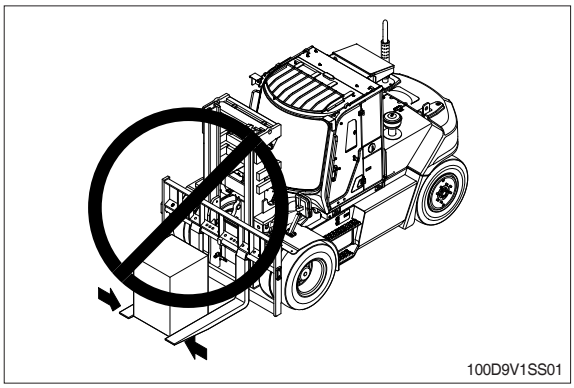

⚠ Restrict the sideshift movement with raised load.

Abrupt sideshifting under such condition will dramatically reduce the stability of the truck and may cause over-turning.

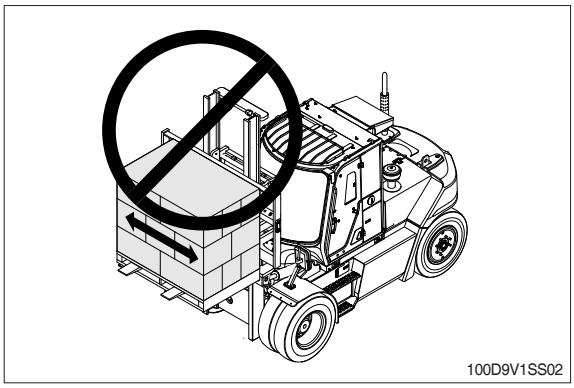

⚠ Avoid overloading or uneven loading.

Load on the forks according to load capacity mentioned on the truck name plate when sideshift is applied. Uneven loading will deteriorate the stability of the truck when the load is raised.

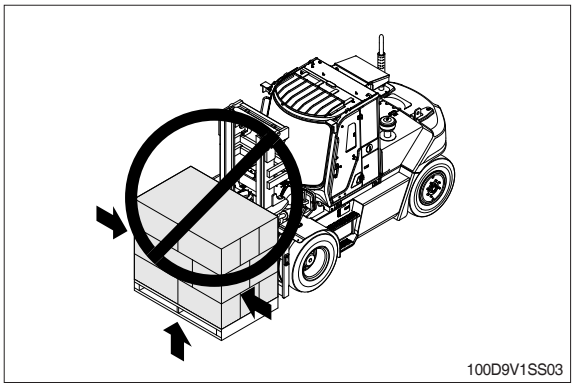

⚠ Top of the load should not extend above the backrest.

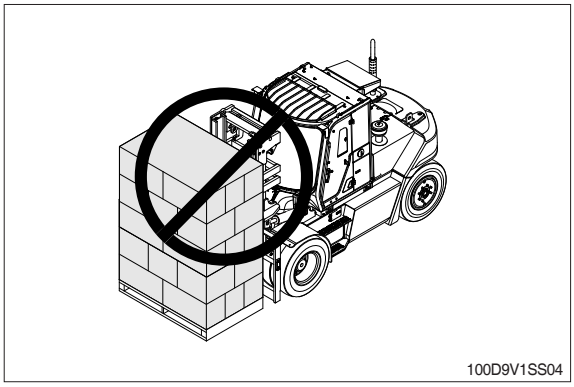

Never operate the side shift while the forks are not equipped with supports such as a load table for the load.

Never travel the forklift while the side shift is moved with load.

In case of moving the side shift with load, it can be caused load dropping or overturning of the forklift due to unbalanced weight.

⚠ The forklift can be overturned due to the unbalanced load.

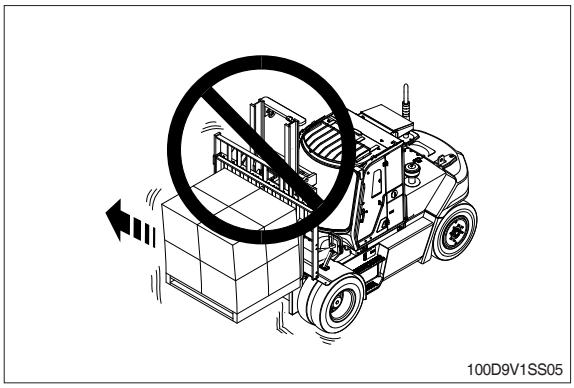

It should be observed that the side shift with load is operated in netural position before traveling.

When operating side shift with load, operate slowly so that it can not avoid from dropping of the load or overturning of the forklift.

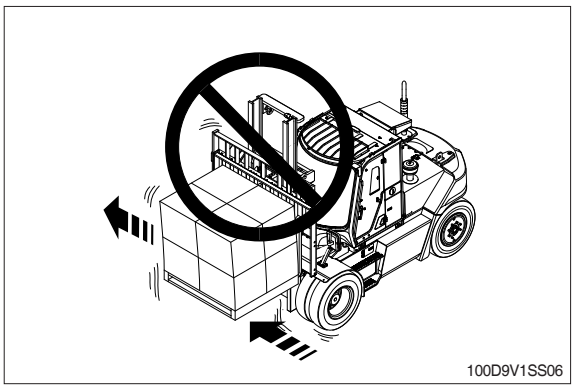

Never move the load to push or pull of it by the side shift.
It can be caused damaging of the loads or injuring of the people.

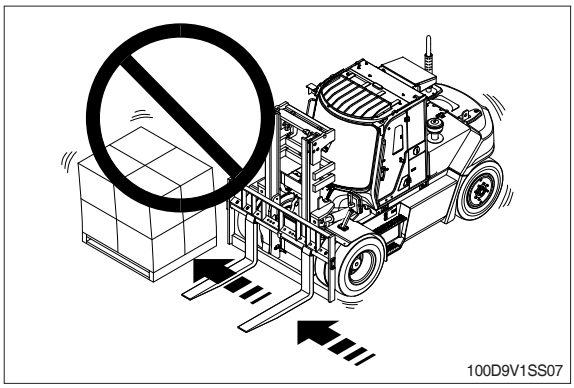

While traveling the forklift with the load on the side shift, if the operator lift or lower the load without shifting it in the netural position, it can be overturned the forklift due to unstabled load.

When lifting or lowering the side shift with load, it should be observed that the load is moved into the netural position.

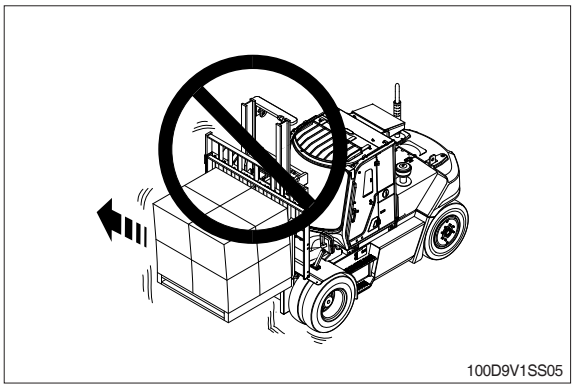

Do not operate the fork positioner with a load, or with the fork arm on the ground.

⚠ Never move the levers to operate the fork positioner suddenly and quickly.
It can be caused to drop the load.

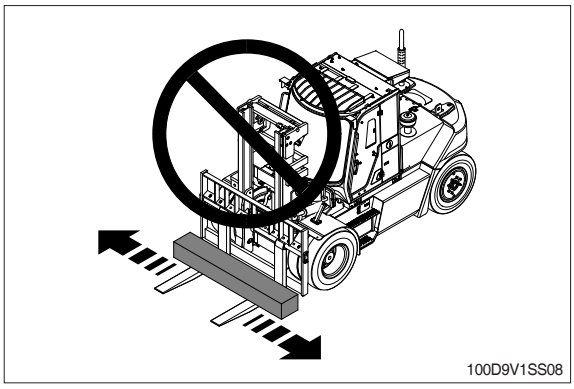

1. LOOSE LOADS

⚠ **Loose or unbalanced loads are dangerous.**
Observe these precautions.

Never carry loose or uneven material.

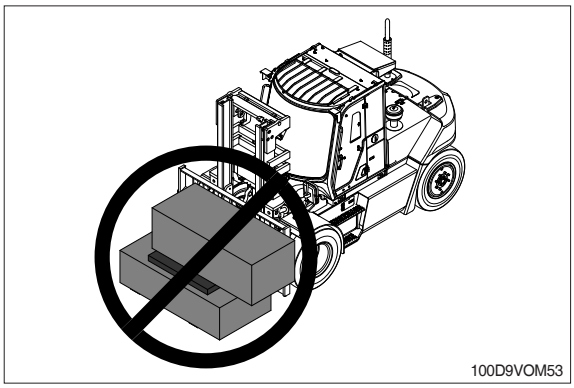

Center wide loads.

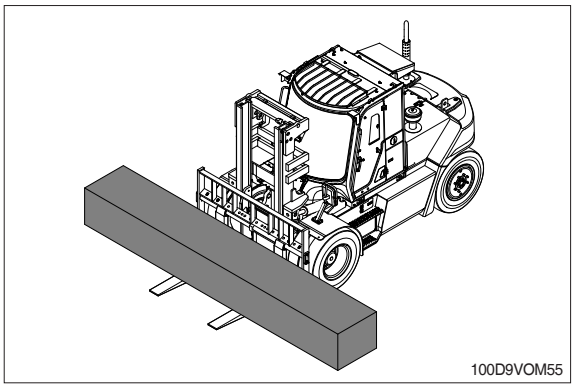

Stack and band loose material.

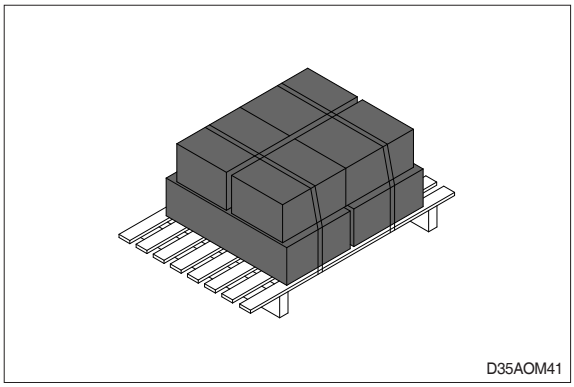

Avoid sudden braking or starting

⚠ **When the truck is loaded, do not drive at maximum speed.**

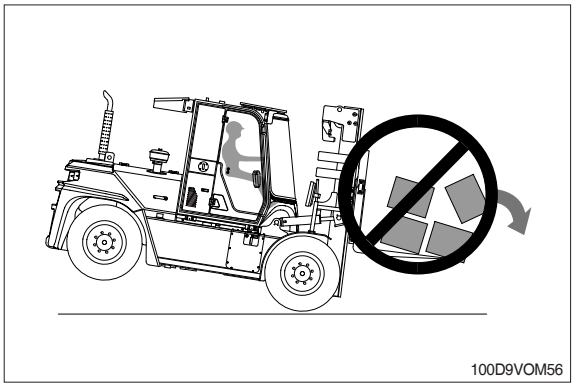

2. LONG AND WIDE LOADS

⚠ **With long or wide loads, you need more room. So slow down and watch your clearance.**

When extra-long material makes it necessary to travel with the load elevated, do so with extreme care and be alert to load end-swing when turning.

⚠ **A long load reduces the capacity of the truck. Know and understand your truck load rating.**

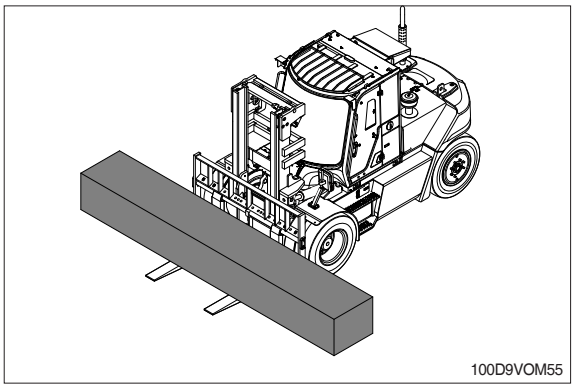

3. REAR SWING

⚠ **When turning, be sure the rear end of the truck does not swing into racks, posts, etc. Watch for pedestrians beside the truck.**

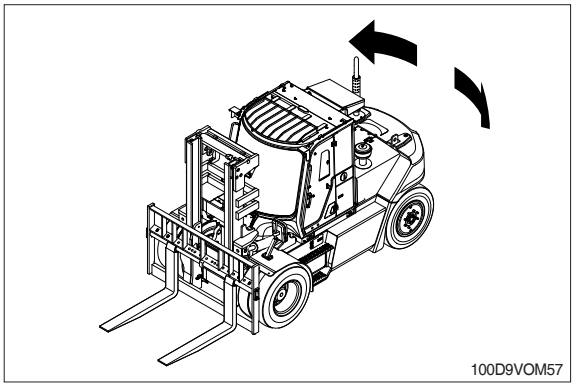

4. LOW OVERHEAD CLEARANCE

⚠ Know the height of your truck, with and without a load. Check your clearances. Keep the load low and tilted back.

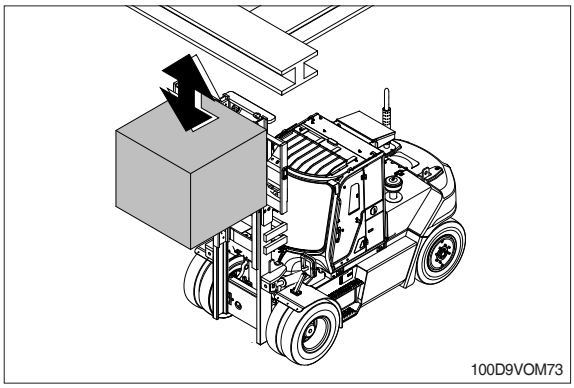

⚠ Watch overhead clearance:
Moving into overhead structures can tip a truck over, or spill a load.

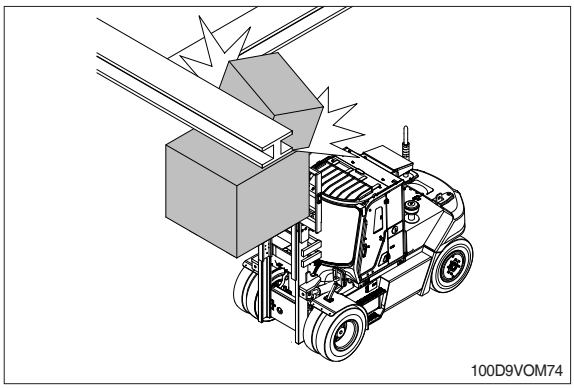

5. FAST TURNS AND HIGH LOADS

⚠ Slow down before turning.
The truck can tip over.

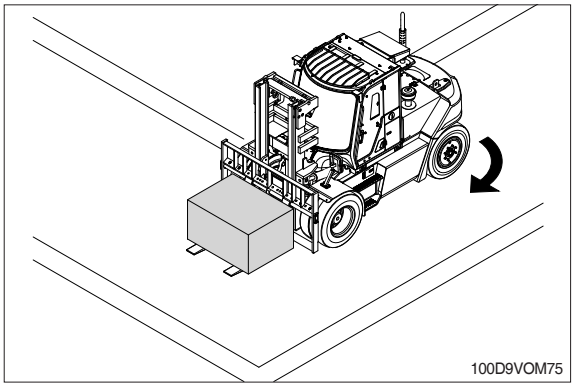

⚠ Turn too sharp with a raised load and your truck can tip even at slow speeds. Travel with a load raised only when removing or depositing a load.

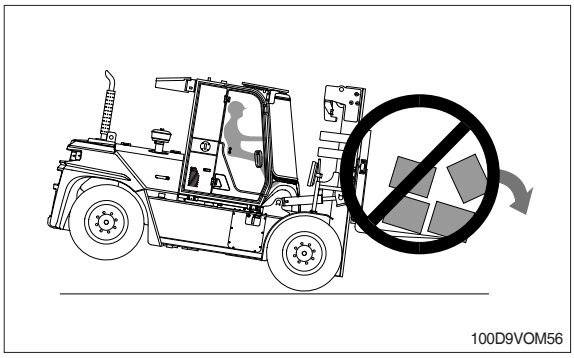

6. RIGHT ANGLE STACKING

⚠ When right angle stacking or moving with a raised load to clear low objects, avoid sharp turns and move slowly.

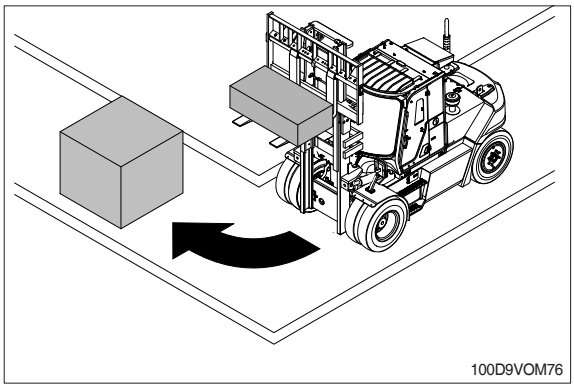

7. CHAIN SLACK

⚠ Slack chains mean rail or carriage hang-up.
Raise the forks before you move, or broken chains can result.

⚠ In case forks with loads are stuck while lowering the mast, lift the mast again and prevent chains from being slack.

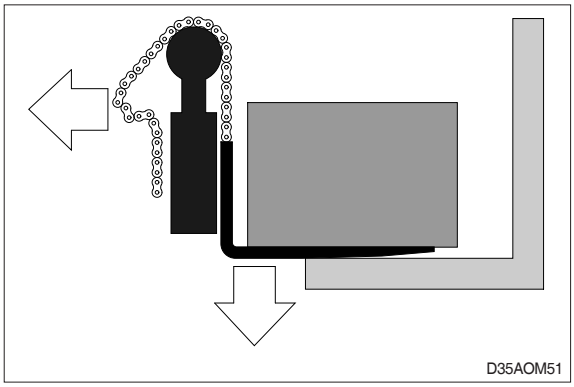

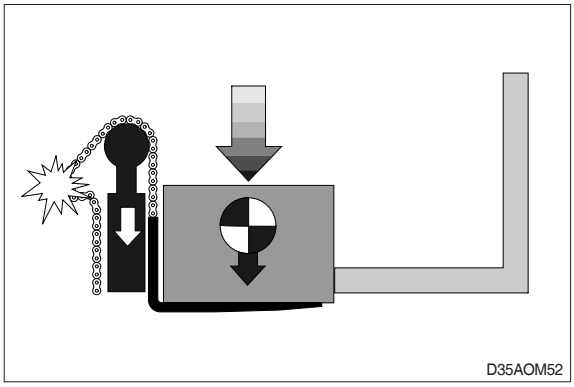

8. PALLETS AND SKIDS

⚠ Do not move or store materials on damaged pallets or skids. Items can fall through them causing severe injury or death.

⚠ Be sure the pallet or skid you are using is in good condition and does not have defective or missing components and fasteners.

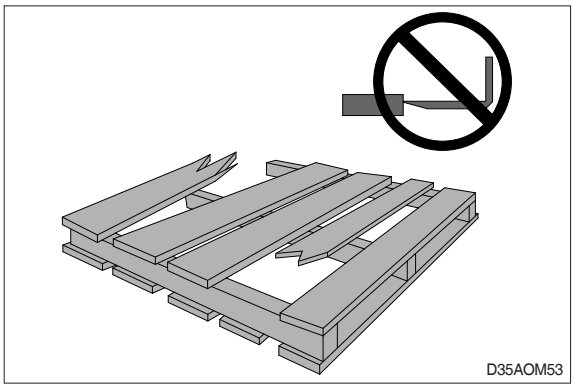

9. CAUTION FOR ELECTRICAL LINES

⚠ When moving the truck with the mast raised, watch out electrical lines over the truck.

⚠ The operating near the electrical lines is very dangerous.
Operate within safe working permitted as below.

Supply voltage	Min safe separation
6.6 kV	3 m (10 ft)
33.0 kV	4 m (13 ft)
66.0 kV	5 m (16 ft)
154.0 kV	8 m (26 ft)
275.0 kV	10 m (33 ft)

⚠ If the truck touches the electric power lines, keep sitting on the operator's seat and make sure the personnel on the ground not to touch the truck until turning off the electric current.
Jump off the truck without contacting the truck when you need to get off.

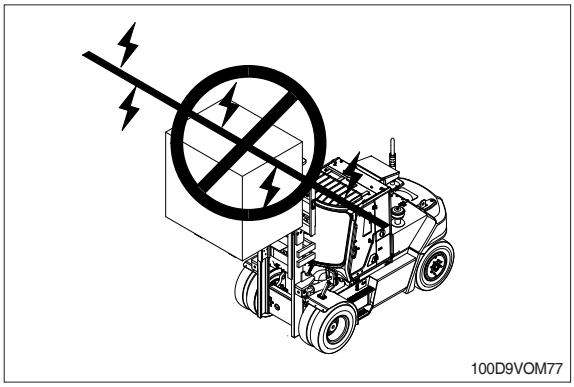

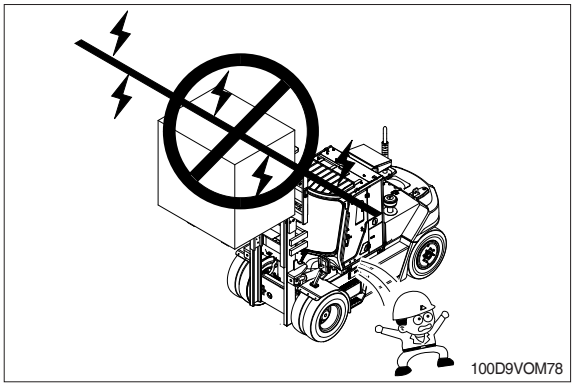

10. LIFTING LOADS

Never permit any persons to stand or pass under lifted load.

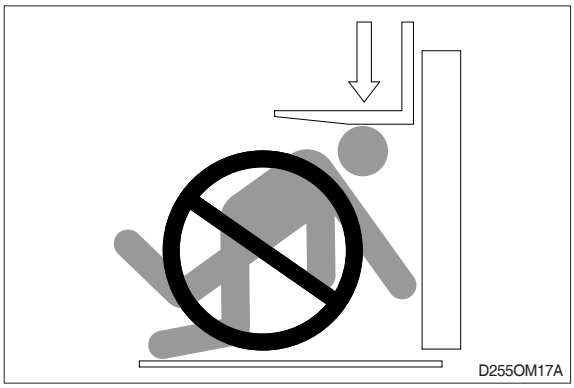

Never use wire rope to lift a load.

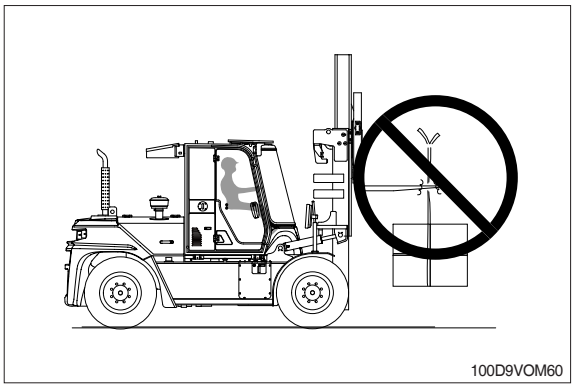

11. FORK POSITIONER

Do not operate the fork positioner with a load, or with the fork arm on the ground.

⚠ **Never move the levers to operate the fork positioner suddenly and quickly. It can be caused to drop the load.**

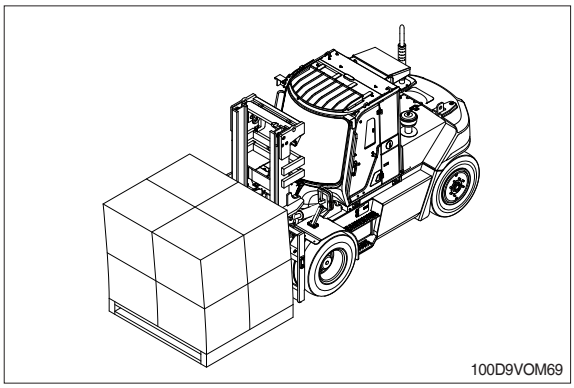

12. SOLID TIRE

When "solid tires" are equipped, follow below.

1) Do not travel more than 25 km/hr (16 mph).
2) Do not travel further than 8 km (5 miles) in an hour.
3) Do not drive on the road for automobile.
4) Be sure to check wheel nut tightness every 50 hours.
5) Retighten the wheel nuts after the first 10 hours after changing the wheel.

⚠ **Our warranty does not cover any damages caused by excessive driving.**

13. WEIGHT INDICATOR (OPTION)

· This device is a convenience feature that shows the weight of the load lifted by the fork. If the weight of the load exceeds the truck's rated capacity, a warning tone can be used to check the truck's overload in advance. This helps to prevent safety accidents such as overturning by improving compliance with rated loads and safety of work.

· Measurement method

1) Insert a fork into the load pallet and raise it to a height of 300 to 500 mm (12~20 in) from the ground.
2) Position the mast vertically and check the weight displayed on the instrument cluster.
3) If the weight exceeds the rated capacity of the truck, reduce the weight or work with a larger capacity truck.

※ Never do weight measurements during driving or unloading operations and be sure to do so under flat stop conditions before work.

※ If the fork is in a high position, the weight may be displayed differently. (Weight increase, friction, relief valve etc.)

※ It should not be used as a weight reference value for business transactions and certification. The unit displays the measured pressure value of the cylinder in the circuit in terms of weight. Therefore, it should not be used to determine whether the weight value is close to the acceptable value.

1. GENERAL LOCATIONS

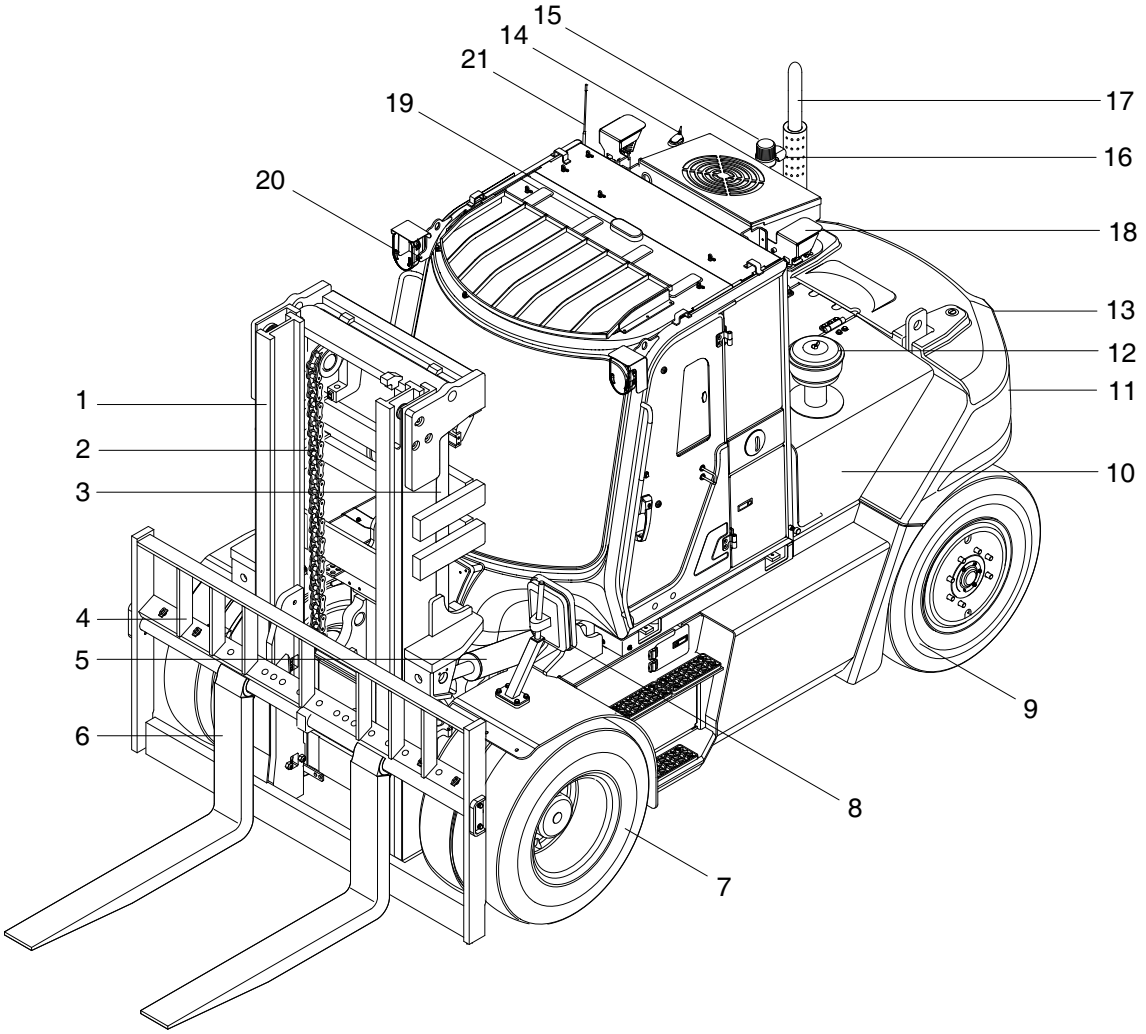

100D9V3CD10

1	Mast	8	Rear view mirror	15	Beacon lamp (option)
2	Lift chain	9	Rear wheel	16	Camera (option)
3	Lift cylinder	10	Body wing cover	17	Silencer
4	Carriage and backrest	11	Rear combination lamp	18	Rear work lamp
5	Tilt cylinder	12	Preclenaer	19	Cabin
6	Fork	13	Counterweight	20	Head and turn signal lamp
7	Front wheel	14	Mobile antenna	21	Antenna

2. NAME PLATE

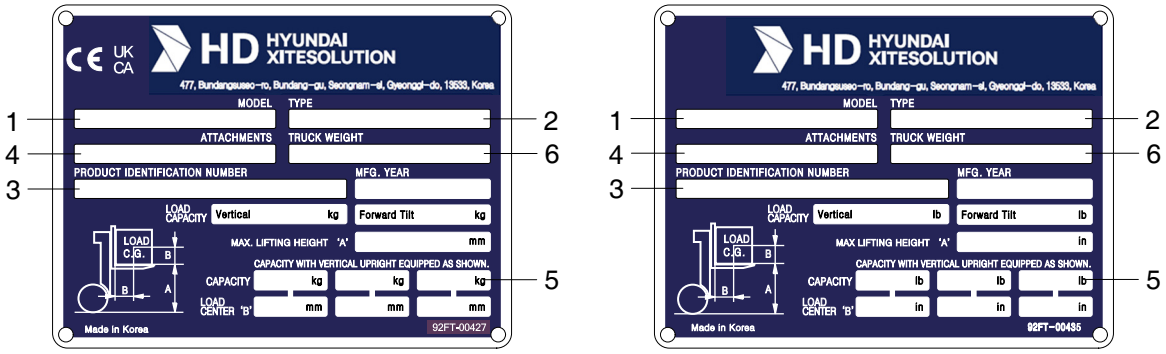

92FT-00427A

1) TRUCK MODEL NUMBER OR REGISTERED NAME

2) TRUCK TYPE

The type is indicated a type of the truck such as diesel, LPG or battery.

3) TRUCK SERIAL NUMBER

An identification number assigned to this particular truck and should be used when requesting information or ordering service parts for this truck from your authorized HYUNDAI dealer. The serial number is also stamped on the frame.

4) ATTACHMENT DESCRIPTION (IF ANY INSTALLED)

The user must see that the truck is marked to identify the attachment (s), including the weight of the truck/attachment combination and truck capacity with the attachment.

5) CAPACITY RATING, LOAD CENTER, AND LIFTING HEIGHT DATA

Shows the maximum load capacity of this truck with relation to load centers and fork heights (See diagram on plate). Personal injury and damage to the truck can occur if these capacities are exceeded.

Do not exceed the maximum capacity specified.

6) TRUCK WEIGHT

The approximate weight of the truck without a load on the forks. This weight plus the weight of the load must be considered when operating on elevators, elevated floors, etc. to be sure they are safe.

⚠Before modifications that affect the stability of safety systems are made written approval from HYUNDAI. Contact your authorized HYUNDAI dealer for a new nameplate showing the revised capacity.

3. CAB DEVICES

1) The ergonomically designed console box and suspension type seat provide the operator with comfort.

2) ELECTRONIC MONITOR SYSTEM

(1) The centralized electronic monitor system allows the status and conditions of the truck to be monitored at a glance.

(2) It is equipped with a safety warning system for early detection of truck malfunction.

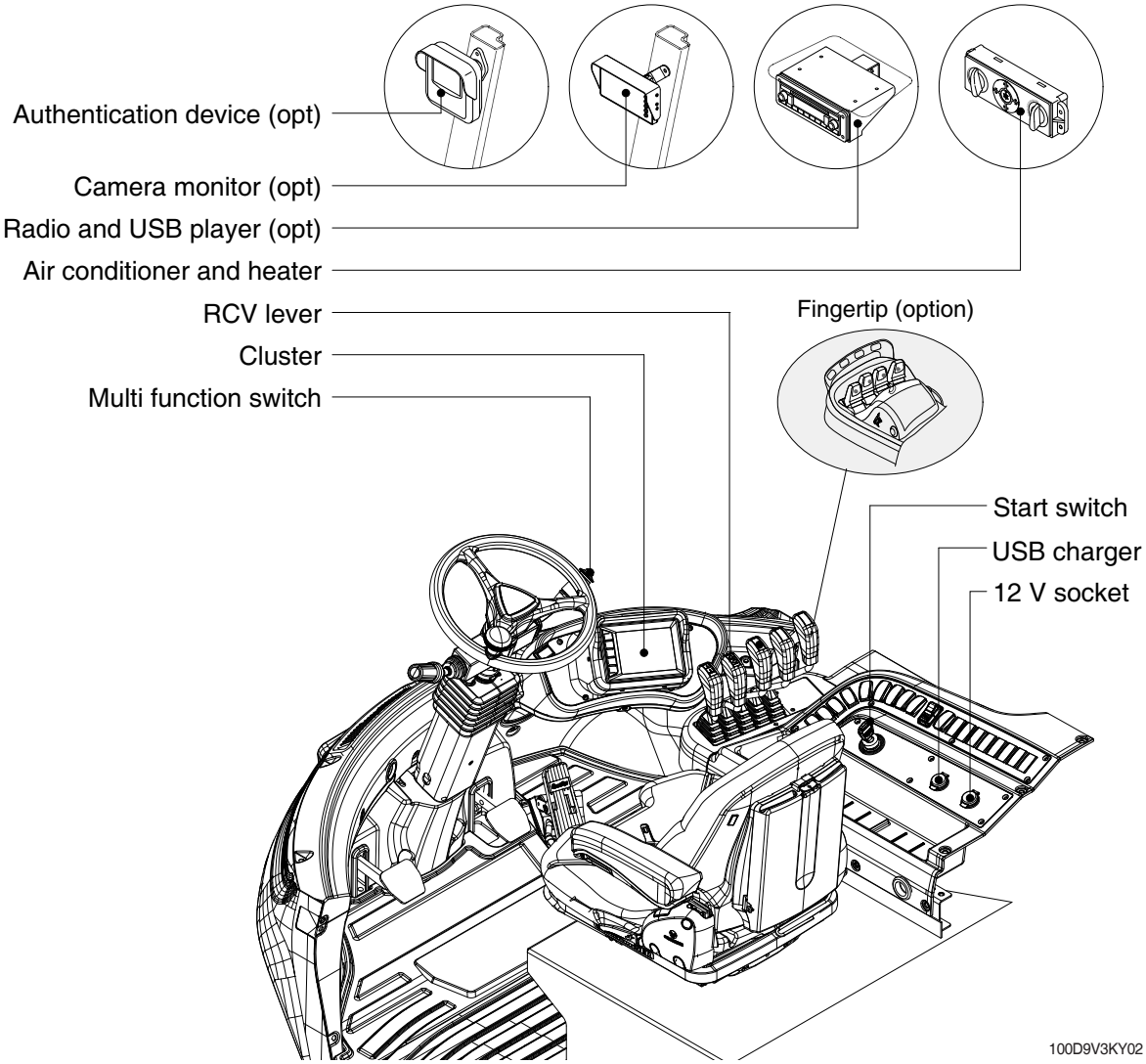

4. CLUSTER

1) STRUCTURE

Like following figure, cluster is consisted of LCD and buttons. LCD will indicate the operation and abnormal status of truck to the driver in order to use and maintenance. Also, LCD allows to set and indicate the various modes, monitoring, and gadgets.

※ **The cluster installed on this truck does not entirely guarantee the condition of the truck. Daily inspection should be performed according to chapter 7. PLANNED MAINTERNACNE AND LUBRICATION.**

※ **When the cluster provides a warning immediately check the problem, and perform the required action.**

2) GAUGE

(1) Operation screen

Operating screen will be displayed if turn on the start switch.

70D9V3KY30A

1	Speed meter	3	Coolant temperature gauge	5	Transmission oil temperature gauge
2	Fuel gauge	4	DEF gauge	6	Clock

(2) Speed meter

100D9V3KY30

- It indicates the speed of truck and calibrated in miles per hour (mph) or kilometer per hour (km/h).

※ **Speed unit can be set in the speed unit menu of display set up at page 3-32.**

(3) Fuel gauge

70D9V3KY31

- Fuel gauge displays the approximate amount of fuel remaining in the fuel tank.
- It shall be obtained fuel as soon as warning lamp lights on.

(4) Coolant temperature gauge

70D9V3KY32

- It indicates the temperature of the engine coolant.
  - White zone : 40 ~ 120 ℃ (104 ~ 248 ℉)
  - Red zone : Over 120 ℃ (248 ℉)
  - Warning lamp on : Over 115 ℃ (239 ℉)
- If the gauge display in the red zone, or warning lamp comes on, please stop the engine and inspect the coolant system.

(5) DEF (Diesel Exhaust Fluid) gauge

70D9V3KY33

- This gauge indicates the level of DEF.
- Fill the DEF when the level is low.

(6) Transmission oil temperature gauge

70D9V3KY34

- This range indicates the temperature of transmission oil.
  - White range : 40 ~ 109 ℃ (104 ~ 228 ℉)
  - Amber range : 110 ℃ (230 ℉) or higher
- - Red range : 120 ℃ (248 ℉) or higher
  Keep idling engine at low speed until the indicator is in the operating range.
- If the indicator is in the red range, it means the transmission is overheated. Be careful that the indicator does not move into the red range.

(7) Clock

35D9VB3KY07

- It displays current time.
- The time can be adjusted at display Set Up > Time Set Up menu.

3) WARNING LAMPS

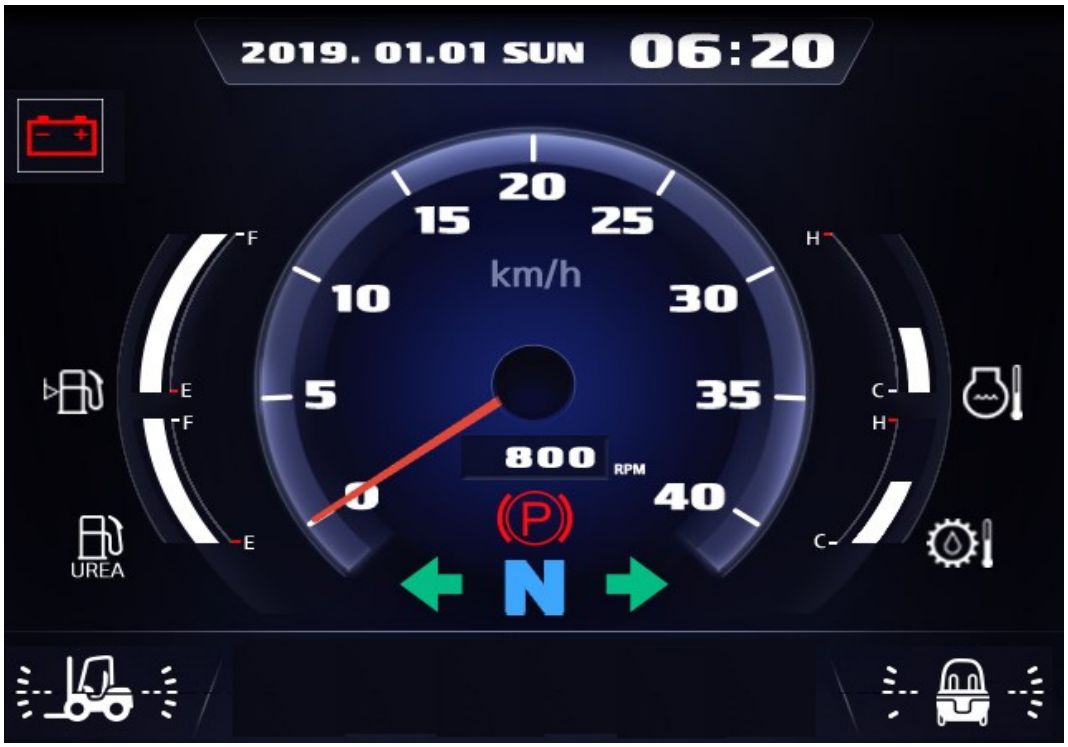

70D9V3KY35

※ Warning and indicator lamp will display only items that were set as ON, and all warning and indicator except fuel level warning and coolant temperature warning will be displayed in order from the left of screen. And directional indicator lamp will display at the center.

No.	Warning lamp		No.	Warning lamp	
1		Fuel Level warning lamp	12		HEST warning lamp
2		Coolant temperature warning lamp	13		Clutch protection warning lamp
3		Engine oil pressure warning lamp	14	COMM ERROR	Communication error warning lamp
4		Air cleaner warning lamp	15	UREA	DEF low warning lamp
5		Water in fuel warning lamp	16		Brake fail warning lamp
6	CHECK	Engine check warning lamp	17		Seat belt reminder lamp
7		Engine stop warning lamp	18	F F	Fingertip warning lamp
8		Battery charge warning lamp	19		Transmission warning lamp
9		Transmission oil temperature warning lamp	20		FSCU Communication error warning lamp
10		Exhaust system cleaning warning lamp	21		FSCU warning lamp
11		Exhaust system cleaning inhibit warning lamp	-	-	-

(1) Fuel level warning lamp

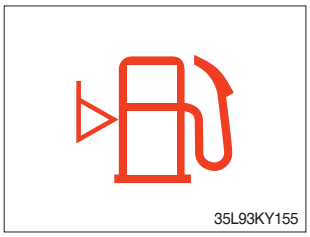

- Warning lamp will be displayed if fuel level is low.
- Please refuel immediately if the lamp is ON.

(2) Coolant temperature warning lamp

- Coolant temperature warning will be lit up when temperature is over 115 ℃ (239 ℉).
- If the warning lamp is on continuously, please inspect the coolant system.

(3) Engine oil pressure warning lamp

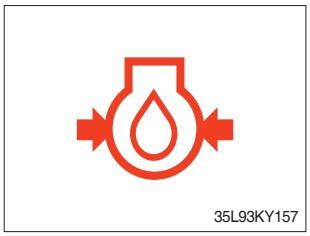

- This warning lamp will be lit up when engine oil pressure is low.
- Stop the engine immediately if the warning lamp is lit up. Please check the engine oil.

(4) Air cleaner warning lamp

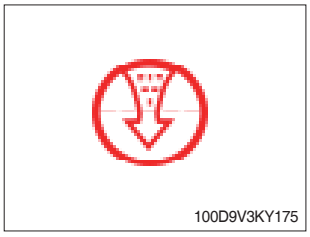

- This warning lamp is lit when air cleaner element is clogged up.
- Please clean up or replace the element.

(5) Water in fuel warning lamp

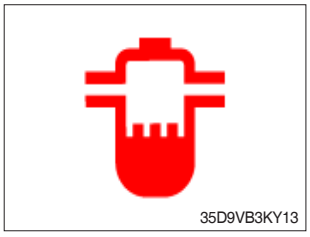

- Light up when water in fuel.
- Stop the engine and please drain the water of the fuel filter.

(6) Engine check warning lamp

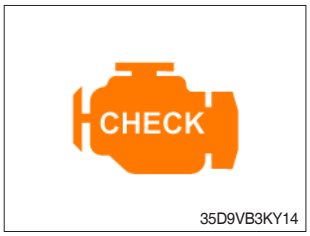

- When the engine is ON, it blinks for about 3 seconds. If the warning light remains on after 3 seconds, there is something wrong with the engine control, fuel supply and so on.
- Check the failure code of cluster.

※ **Some engine controls may not start if there is a problem.**

※ **Continued operation with the engine warning lamp ON or flashing can damage the exhaust control system, which affects operating performance and fuel consumption. You may also be subject to sanctions related to emission regulations, so be sure to check.**

(7) Engine stop warning lamp

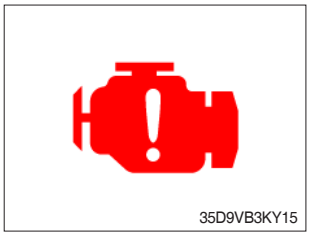

- If the lamp lights on, stop the engine immediately and check the engine.

※ **Please contact your Hyundai service center or local dealer.**

(8) Battery charge warning lamp

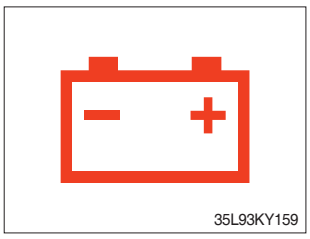

- This warning lamp is lit when battery charging voltage is low.
- Please inspect the battery charging circuit if the warning lamp is lit.

(9) Transmission oil temperature warning lamp

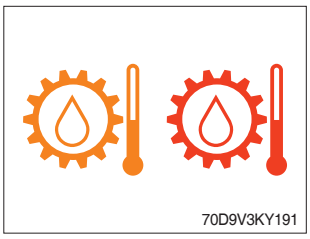

- Transmission oil temperature warning is consisted of two indications.
  - 110 ℃ (230 ℉) or higher : Amber is light up
  - 120 ℃ (248 ℉) or higher : Red is flashing
- When the red lamp lights up during operation, stop the engine and check the truck.

(10) Clutch protection warning lamp

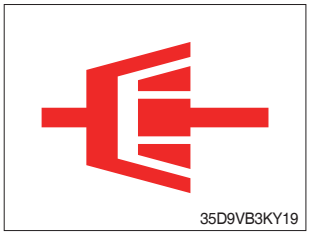

- Warning lamp will be displayed if transmission oil pressure is not enough or while inching operation.
- Please check the transmission when the lamp is displayed without inching operation. If not, the brake performance can be decreased until the problem is resolved.

(11) Communication error warning lamp

- This warning lamp will be lit up if the communication between cluster-CI and ECU is fail.
- Please check the communication line if the warning lamp is lit up.

(12) FSCU Communication error warning lamp (option)

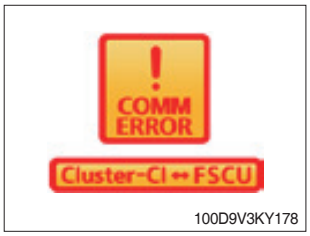

- This warning lamp will be lit up if the communication between MCU and FSCU is fail.
- Please check the communication line between MCU and FSCU if the warning lamp is lit up.

(13) Exhaust system cleaning warning lamp

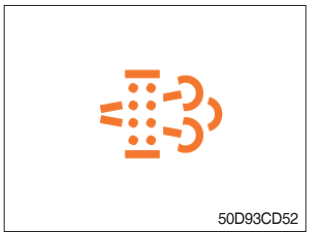

· This warning lamp lights ON or flashes when exhaust system cleaning is needed as seen in the table below

Warning lamp				Remark
Exhaust warning lamp	DEF low lamp	Engine check lamp	Engine stop lamp	
	UREA	CHECK		
On	-	–	-	1. Changing to a more challenging duty cycle. 2. Performing a manual (stationary) exhaust system cleaning.
On	-	On	-	1.The aftertreatment exhaust system needs to be cleaned immediately. 2. Engine power will be reduced automatically if action is not taken.
-	-	-	On	1. These lamps will be on when a manual (stationary) exhaust system cleaning is not performed 2. Stop the engine immediatary 3. Please contact your hyundai service center or local dealer
Flash	-	-	-	The status of a manual (stationary) exhaust system cleaning when the exhaust system cleaning switch has been activated.
-	On	-	-	DEF level initial warning DEF level 10% (engine error code 3497)
-	Flash	-	-	DEF level critical warning DEF level 5% (engine error code 3498)
-	Flash	On	-	DEF level first derate warning DEF level 2.5% (engine error code 1673, 25% derate)
-	Flash	On	-	DEF level secondary derate warning DEF level 0% (error code 3547, 3714, 50% derate, 30 min)
-	Flash	On	On	DEF level final derate warning Engine error code 3712 Contact Hyundai Service center or dealer

※ Manual exhaust system cleaning

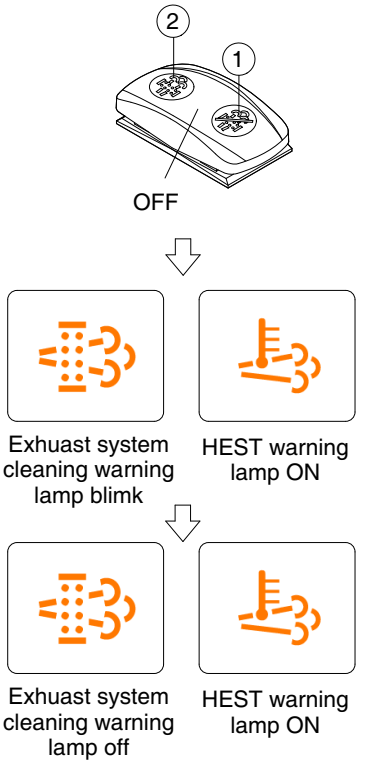

※ **Manual exhaust system cleaning must be operated in a fireproof area.**

※ **To stop a manual exhaust system cleaning before it has completed, set to the exhaust system cleaning switch to the inhibit or turn OFF engine.**

- Stop and park the truck.
- Push the switch to position ② to initiate the manual exhaust system cleaning.

※ **Refer to the page 3-44 for the exhaust system cleaning swtich operation.**

※ **The engine speed may increase during exhaust system cleaning and it will take approximately 20~60 minutes depending on condition.**

- The exhaust system cleaning warning lamp will flash and HEST warning lamp will light on during the exhaust system cleaning is operation.
- The exhaust system cleaning and/or HEST warning lamp will light OFF when the exhaust system cleaning is completed.

(14) Exhaust system cleaning inhibit warning lamp

- This warning lamp lights ON when the exhaust system cleaning switch is pushed inhibit position, therefore automatic and manual exhaust system cleaning can not occur. It should inhibited, before caused fire due to the exhaust gas in high temperature.

※ **Refer to the page 3-44 for the exhaust system cleaning switch.**

(15) HEST (High exhaust system temperature) warning lamp

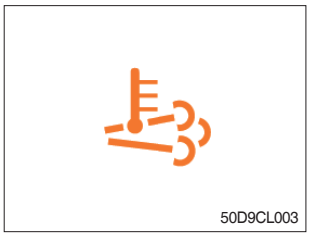

- This warning lamp indicates, when illuminated, that exhaust temperatures are high due to exhaust system cleaning.
- The lamp will also illuminate during a manual exhaust system cleaning.
- When this lamp is illuminated, be sure the exhaust pipe outlet is not directed at any surface or material that can melt, burn, or explode.

⚠ **When this lamp is illuminated, the exhaust gas temperature could reach 800 ˚C [1500 ˚F], which is hot enough to ignite or melt common materials, and to burn people.**

※ **The lamp does not signify the need for any kind of equipment or engine service; It merely alerts the equipment operator to high exhaust temperatures. It will be common for the lamp to illuminate on and off during normal equipment operation as the engine completes the exhaust system cleaning.**

(16) Engine stop warning lamp

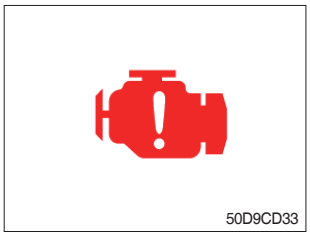

- When this warning lamp lights ON, stop the engine immediately and and check the DEF level and related parts of the engine.

※ **Please contact your Hyundai service center or local dealer.**

(17) Fingertip red warning lamp

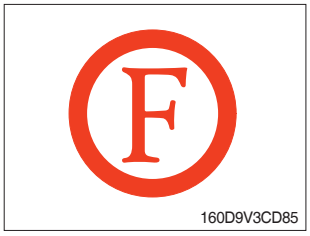

- This lamp lights ON when the forklift truck is in a condition that is serious enough to stop it.
- If the warning light is lit while driving, stop the engine and check the forklift.

(18) Fingertip amber warning lamp

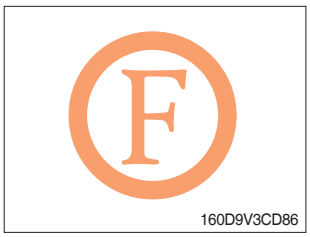

- This lamp lights ON when there is a problem with the forklift truck system, but the vehicle does not need to be stopped immediately.

(19) DEF (Diesel Exhaust Fluid) low warning lamp

- This warning lamp indicates, when illuminated or flashing, that the diesel exhaust fluid level is low.

※ **Add the diesel exhaust fluid into DEF tank.**

(20) Brake fail warning lamp

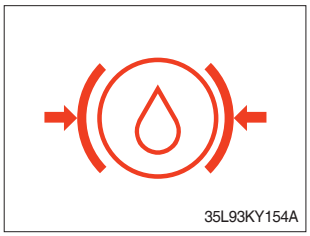

- The lamp lights ON when the oil pressure of service brake drops below the nomal range.
- When the lamp is ON, stop the engine and check for its cause.

※ **Do not operate untill andy problems are corrected.**

(21) Transmission warning lamp

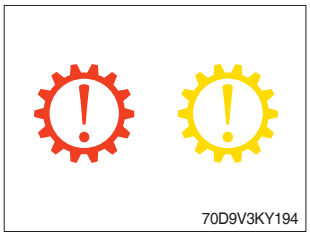

- If the lamp lights on, check the transmission.
- If the red warning light is lit while driving, stop the engine and check the forklift.

(22) Seat belt reminder lamp

- This lamp will be blinked 5 times, after key on.
- If not wearing a seat belt, this reminder lamp will be displayed (option). (If driving over 4 km/h, it will be activated with buzzer)

※ **If reminder lamp still displayed after wearing seat belt, Please check the seat belt wiring.**

(23) FSCU warning lamp (option)

- If this warning light is lighted, check the failure code of FSCU. (with activating buzzer)

※ **If the red warning light is lit while driving, stop the engine and check the forklift.**

4) INDICATOR LAMPS

70D9V3KY36

※ Warning and indicator lamps will display only items that were set as ON, and all warning and indicator except turning indicator lamp and driving indicator lamp will be displayed in order from the left of screen.

No.	Indicator lamp		No.	Indicator lamp	
1		Consumables management indicator lamp	8	N	Driving indicator lamp
2		Engine warning up indicator lamp	9	F F1 F2 F3	
3		Fuel warmer indicator lamp	10	R R1 R2 R3	
4	P	Parking brake indicator lamp	11	SIDE	Side mirror heated pilot lamp (option)
5	TILT LOCK	Tilt lock indicator lamp (if installed)	12		DrivingHigh beam indicator lamp
6	OP SS	OPSS indicator lamp	13	M A A1 A2	Shift mode indicator lamp
7		Driving turn lamp	14		Inching switch on indicator lamp

(1) Consumables management indicator lamp

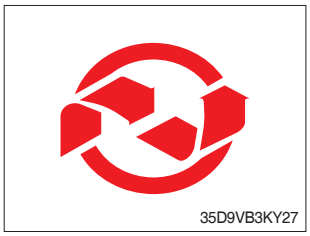

- Light up if consumables which must be replaced are exist.
- The indicator lamp will light up only 3 minutes since start switch ON, and then light OFF.
- Please check the consumables management list in maintenance menu.

(2) Engine warm-up indicator lamp

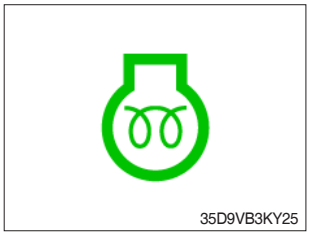

- The truck senses the engine coolant temperature and warms-up engine when needed.
- When it is happening, the indicator lamp is ON.

(3) Fuel warmer indicator lamp

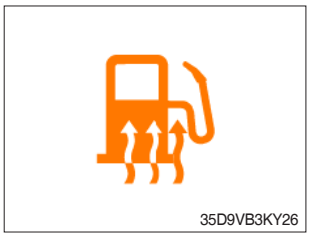

- Light up when fuel warmer is operating. (Controlled by ECU)

(4) Parking brake indicator lamp

- Light up when parking brake is ON.

(5) Tilt lock indicator lamp (if installed)

- The Indicator lamp will be lit up if the tilt lock switch (option) is entered.
- Tilt action will be limited if this Indicator lamp is lit up and the mast is located at 90 degrees.

(6) OPSS indicator lamp

- Light up if driver leave seat during operation.
- Truck driving and/or mast control will be blocked if lamp is lit up.

※ **Please refer to page 0-12 for details.**

(7) Driving indicator lamp

①Neutral

- This indicator lamp will be lit up when gear selector lever is located in neutral.

②Forward

- This indicator lamp will be lit up if the forward gear is selected.

③Reverse

- This indicator lamp will be lit up if the reverse gear is selected.

(8) Driving turn lamp

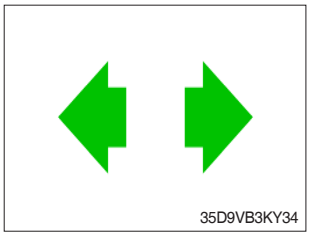

- This indicator lamp will flash if turns on the right or left turn signal.

(9) Side mirror heated indicator lamp (option)

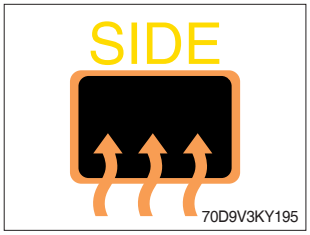

① When the heated mirror is operating, the lamp lights ON.

(10) High beam indicator lamp

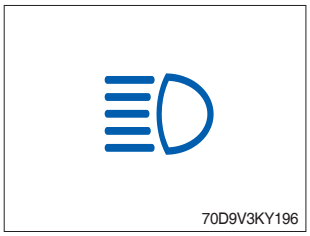

· This indicator is displayed when the vehicle's high beam is on.

(11) Shift mode indicator lamp 1

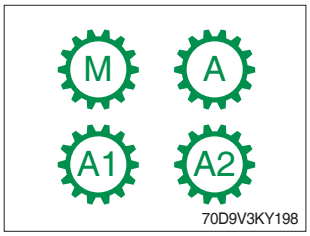

· This indicator shows the current vehicle's shift mode, A1 and A2 are indicated on vehicles with 2nd gear or higher.

(12) Shift mode indicator lamp 2

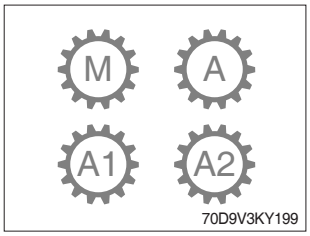

· This indicator shows the shift mode when activating the 2nd FNR, A1 and A2 are indicated on vehicles with 2nd gear or higher.

5) INFORMATION DISPLAY

70D9V3KY40

(1) Mast front/rear tilt

70D9V3KY41

· Display the real time tilt of mast.

(2) Truck front/rear tilt

35D9VB3KY36

· Display the front and rear tilt of truck in real time.
· The red warning symbol turned on condition.
  - Stop : Tilt angle is higher than 2.3˚
  - Driving : Tilt angle is higher than 10.2˚

(3) Truck left/right tilt

35D9VB3KY37

· Display the left and right tilt of truck in real time.
· The red warning symbol turned on condition.
  - Stop : Tilt angle is higher than 3.4˚
  - Driving : Tilt angle is higher than 28.0˚

(4) Load weight (option)

- Display the load weight.
- Screen will display blurry if the weight sensor has not been mounted.

(5) Total trip distance

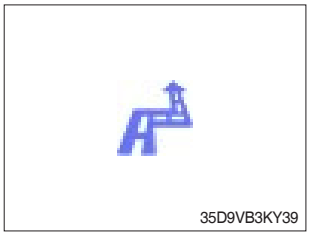

- Display total trip distance of the truck.
- Unit of distance is kilometer.

(6) Operation time

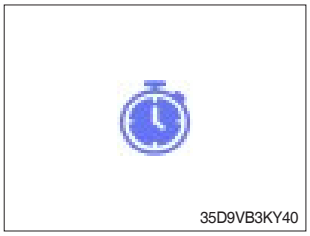

- Display the used time of the truck.

(7) Explanation of warning lamp and indicator lamp

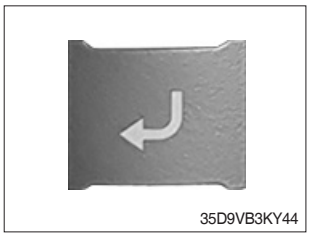

- When warning lamp or indicator lamp comes on, please press the enter button to check detailed explanation.
- During pressing the enter button, it keeps the screen to be shown explanation for warning lamp or indicator.

6) BUTTONS

(1) Camera

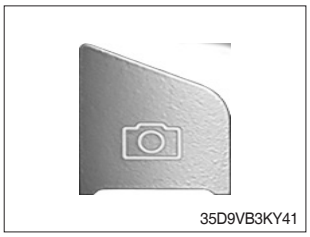
35D9VB3KY41

· This switch displays rear camera images. (if the camera is mounted)

(2) UP/Left

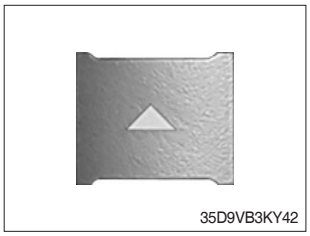
35D9VB3KY42

· This switch is used to move upward or leftward in menu or increase the value.

(3) Down/Right

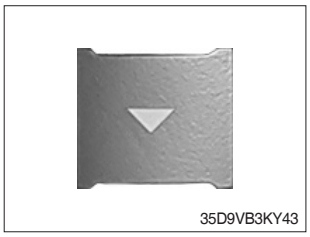
35D9VB3KY43

· This switch is used to move downward or rightward in menu or decrease the value.

(4) Enter (select)

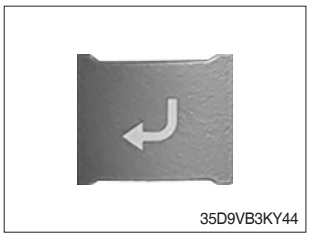
35D9VB3KY44

· This switch is used to enter into the menu or to select.

(5) Cancel (ESC)

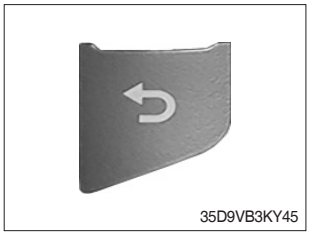
35D9VB3KY45

· This switch is used to cancel or move to upper menu.

7) MAIN MENU

(1) Structure

Menus consist of main menu and sub-menu.

Operation Screen

Main Menu Screen

Sub-Menu Screen

70D9V3KY42

No.	Main menu screen	Sub menu	Explanation
1	35D9VB3KY47	· Model select · Tilt setting · ESL setting · Weight sensor setting (option) · Camera setting (if installed) · Fingertips setting (option) · CSC setting (if installed) · Auto shift setting (if installed) · DCSR setting (if installed) · HAC setting (if installed) · Vehicle Max speed limit · Zero start setting (if installed) · Clutch protection beep (if installed) · ZF TCU calibration · Seat belt interlock (option) · Cluster-CI info	· Diesel, LPG · Truck tilt initialize · ESL setting, Engine start limit, Delay time · Enter the cylinder cross section area, Adjust load weight, Weight display setup · Reverse gear interworking · DCSR on, Cut-off driving speed, Restore driving speed · Maximum speed limitation · Cluster-CI information
2	35D9VB3KY48	· Failure history · Consumables management · I/O inforamation	· Engine, Transmission failure history · Change oil and filter replacement cycle · Analog, Digital signal
3	35D9VB3KY49	· LCD brightness adjustment · User setting · A/S phone No. · Password change · Consumables management	· Automatic, Manual · Time, Unit, Language · Change A/S contact · Engine starting password connect · Maintenance parts management

(2) Equipment menu

① Model Select (a required setting)

Check under the start switch ON status. Selection will be canceled if press the cancel button.

※ This is a required setting. Some functions may not be worked properly if you do not select the model.

※ If you want to move back to previous page, please enter ESC button in any stage.

※ It shall be selected right model to prevent malfunction of truck.

1. NO MODEL

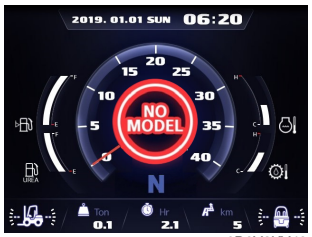

70D9V3KY43

Select the your model.

2. Equipment

35D9VB3KY47

Enter to Equipment.

3. Password

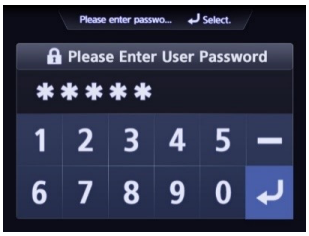

35D9VB3KY51

Enter the password.
Default password is “00000”.
Password length must be 5~10 digits.

4. Model select

70D9V3KY54

Choose Model Select and enter.

5. Diesel or LPG

35D9VB3KY53

Please select the fuel type.

6. Truck weight

70D9V3KY44

Please select the truck weight level.

7. Truck model

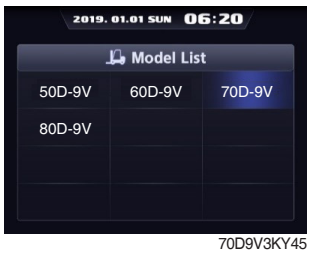

70D9V3KY45

Please select the exact model name.

8. Confirm

70D9V3KY46

Confirm the model which you select.

9. Completion

70D9V3KY47

Model selection is completed.

10. Check

70D9V3KY48

Check the status which is not shown 'NO MODEL' in main display.

② Tilt Setting

a. **Setting (Check under the start switch ON status.)**

※ **The tilt sensor has already been initialized when deliver the truck from factory.**

※ **Tilt reset if the tilt sensor figure or truck tilt is not horizontal in the flatland.**

⚠ **You must set tilt in the flatland since this is a horizontal set up.**

※ **If tilt sensor for mast is mounted (option), locates the mast vertically.**

※ **Mast maximum angle depends on the truck.**

· Truck that has not applied the mast angle sensor

· Truck that has applied the mast angle sensor (option)

70D9V3KY49

1. Equipment

35D9VB3KY47

Enter to Equipment.

2. Password

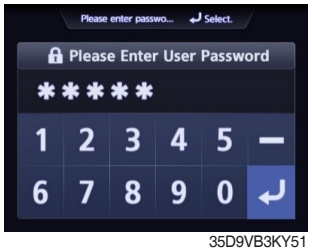

35D9VB3KY51

Enter the password.

3. Tilt setting

70D9V3KY50

Choose Tilt Setting and enter.

4. Instruction

70D9V3KY51

Follow the instruction showing in the screen.

5. Completion

70D9V3KY52

Setting has been completed.

b. **Check functions**

a) Check the real time operation by changing angles of truck tilt and mast tilt.

b) **Auto-leveling (if installed)**

(a) Tilt mast forward or backward.

(b) Start tilting mast toward its vertical position, pushing the auto tilt leveling switch.

(c) Check if the mast stops traveling when it becomes vertical to ground.

c) **Forward or backward truck tilt warning (red)**

· Stop : ±2.3° (1.5 ~ 5 tons)

· Driving : ±10.2° (1.5 ~ 5 tons)

d) Left or right truck tilt warning (red)

- Stop : ±3.4° (1.5 ~ 5.0 tons)
- Driving

Truck weight	Warning angles (red)
1.5 ~ 2.0 tons	±20.3°
2.2 ~ 3.3 tons	±20.8°
3.5 ~ 4.5 tons	±24.2°
5.0 tons ~	±28.0°

③ ESL (Engine Start Limit) Setting : Default is 'Inactive'

1. Equipment

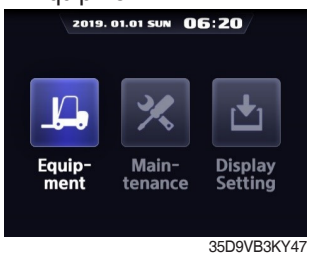

35D9VB3KY47

Enter to Equipment.

2. Password

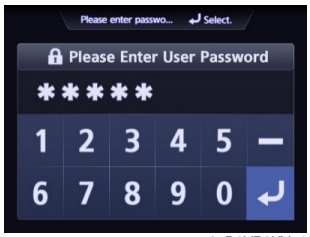

35D9VB3KY51

Enter the password.

3. ELS Setting

70D9V3KY55

Choose ESL setting and enter.

a. Setting

1. Inactive

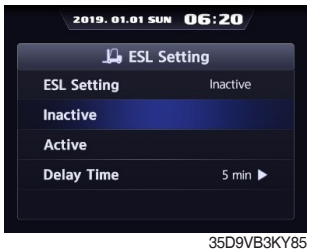

35D9VB3KY85

Choose Inactive.

2. Change setting

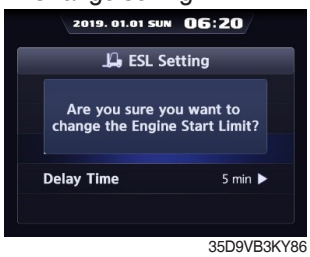

35D9VB3KY86

If you want to change setting, press enter button.

3. Completion

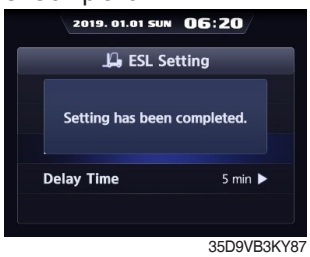

35D9VB3KY87

Setting has been completed.

b. Active

1. Active

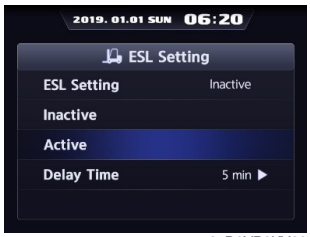

35D9VB3KY88

Choose Active.

2. Change setting

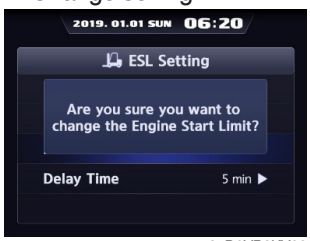

35D9VB3KY89

If you want to change setting, press enter button.

3. Completion

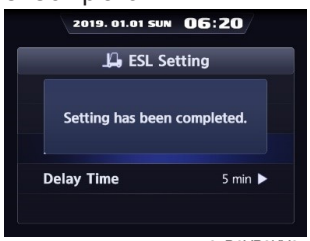

35D9VB3KY87

Setting has been completed.

b. Check functions

(a) Set the mode as active and start switch OFF.

(b) Upon start switch ON, the password screen pops up and starting is prohibited until the right. password has been offered. (But, driver still can start the vehicle if starts within 10 seconds from start switch OFF)

(c) Set the mode as 5 min of delay time and start switch OFF.

(d) check if vehicle can start within 5 min and start switch OFF.

(e) check if vehicle requests password after 5 min.

※ **Start switch ON screen (When startup control mode is ON)**

35D9VB3KY90

c. Delay time

1. Delay time

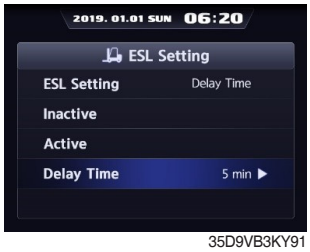

35D9VB3KY91

Choose delay time.

2. Select value

35D9VB3KY92

Select value you want to apply.

3. Change setting

35D9VB3KY93

If you are sure to change ESL, press enter.

4. Completion

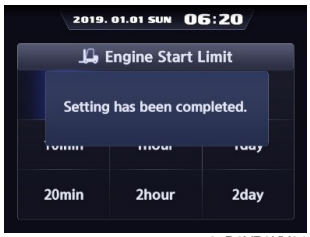

35D9VB3KY94

Setting has been completed.

④ Weight Sensor Setting (option)

Check under the start switch ON status. There are three settings (unload, load, reset) for weight sensor.

※ The weight sensor has already been set when deliver the truck from factory.

a. Setting Cylinder Cross-Section

※ Cylinder cross-section value

unit : cm^2

Model	Mast type	V-mast	TS-mast
100D-9V	V300~500	113.49	141.76
	TS450~500		
	V550~600	141.76	190.07
	TS550~750		

· Truck that has not applied the weight sensor

· Truck that has applied the weight sensor (option)

70D9V3KY53

1. Equipment

35D9VB3KY47

Enter to Equipment.

2. Password

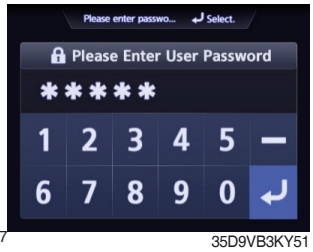

35D9VB3KY51

Enter the password.

3. Weight Sensor Setting

70D9V3KY56

Choose Weight Sensor Setting and enter.

4. Cylinder Cross-Section

70D9V3KY57

Choose Cylinder Cross-Section. If cylinder cross-section is already set up, setting value is shown in initial screen.

5. Value

35D9VB3KY66

Enter cylinder cross-section value using up or down buttons.

6. Completion

35D9VB3KY67

Setting has been completed.

7. Check

70D9V3KY58

Check the value whether it is right.

b. Unloaded status adjustment

1. Equipment

35D9VB3KY47

Enter to Equipment menu

2. Password

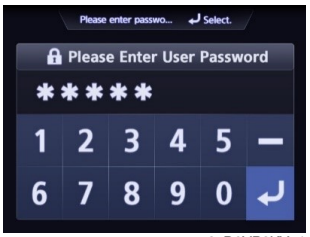

35D9VB3KY51

Enter the password

3. Weight Sensor Setting

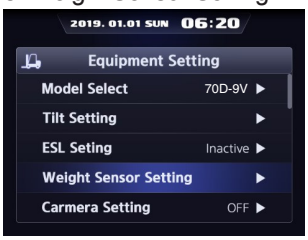

70D9V3KY56

Choose Weight Sensor Setting

4. Load Weight Adjustment

70D9V3KY59

Choose Load Weight Adjustment and enter.

5. Unloaded Status Adjustment

70D9V3KY60

Choose Unloaded Status Adjustment and enter.

6. Instruction

35D9VB3KY71

Follow the instruction showing in the screen. After finish setting and press enter button

7. Completion

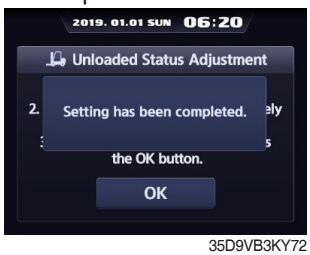

35D9VB3KY72

Setting has been completed.

c. Loaded status adjustment

※ Must be prepared to lift up by locating the load on the fork before enter the weight.

※ MCU (Main Control Unit) recognizes the weight automatically by detecting the pressure change.

※ Must be performed within 30 seconds of the lift task. If it is not completed within 30 seconds, this process will be canceled automatically.

※ Accurate weight value is not recognized if other pressure changes that are occurred besides salvage work.

※ Perform again, if the measurement malfunction is occurred.

1. Equipment

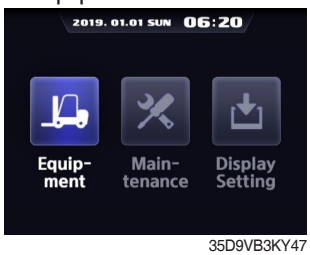

35D9VB3KY47

Enter to Equipment menu

2. Password

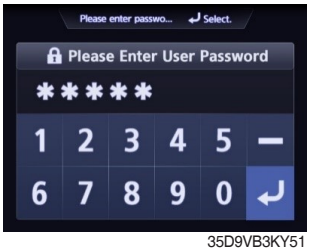

35D9VB3KY51

Enter the password

3. Weight Sensor Setting

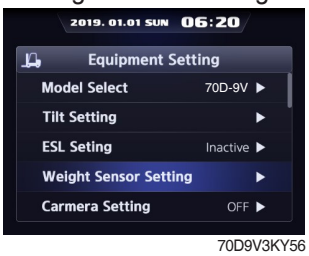

70D9V3KY56

Choose Weight Sensor Setting

4. Load Weight Adjustment

70D9V3KY59

Choose Load Weight Adjustment and enter.

5. Loaded Status Adjustment

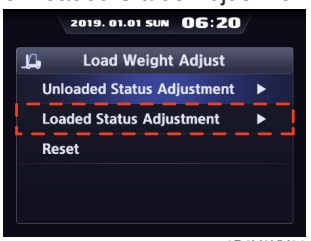

70D9V3KY61

Choose Load Weight Adjustment and enter.

6. Value

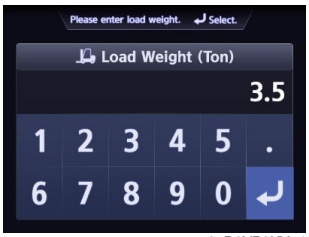

35D9VB3KY74

Enter load weight using up or down buttons.

7. Instruction

35D9VB3KY75

Follow the instruction showing in the screen. After finish setting and press enter button. Please proceed the operation within 30 seconds.

8. Completion

35D9VB3KY76

Setting has been completed.

d. Reset

Initialize the all values of 'Unloaded and Loaded Status Adjustment' that were entered previously. (Cylinder cross-sectional area is not initialized.)

1. Equipment

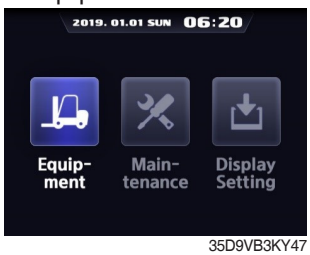

35D9VB3KY47

Enter to Equipment menu

2. Password

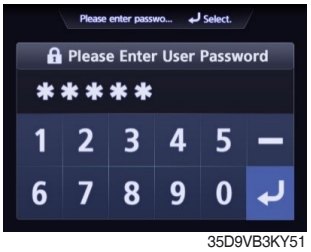

35D9VB3KY51

Enter the password

3. Weight Sensor Setting

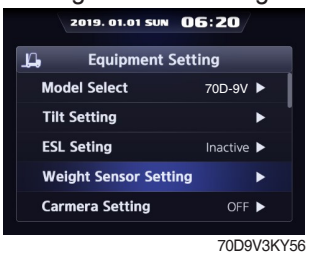

70D9V3KY56

Choose Weight Sensor Setting

4. Load Weight Adjustment

70D9V3KY59

Choose Load Weight Adjustment and enter.

5. Reset

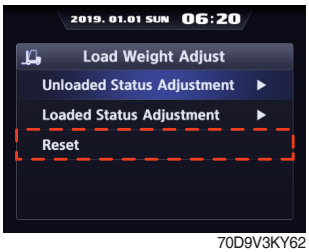

70D9V3KY62

Enter to Reset.

6. Check

70D9V3KY63

Press the enter button.

7. Completion

70D9V3KY64

Reset has been completed.

e. Weight Display Setting

Enable to adjust the digit-number fo weight of main screen.

1. Equipment

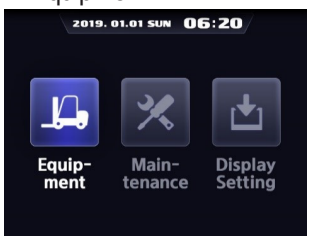

35D9VB3KY47

Enter to Equipment menu

2. Password

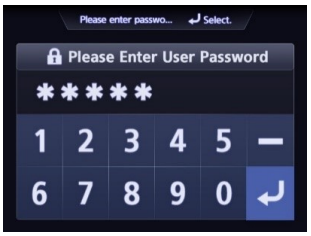

35D9VB3KY51

Enter the password

3. Weight Sensor Setting

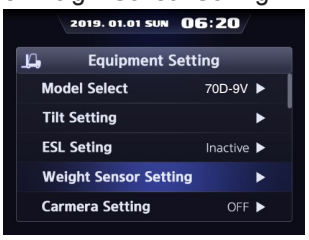

70D9V3KY56

Choose Weight Sensor Setting

4. Weight Display Setting

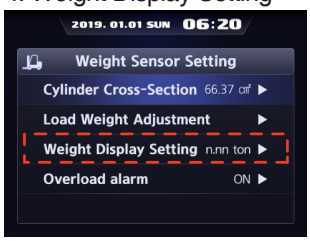

70D9V3KY65

Choose weight sensor setting and enter.

5. Unit

35D9VB3KY81

Choose unit what you want to use.

6. Completion

35D9VB3KY80

Setting has been completed.

· 100 kg unit

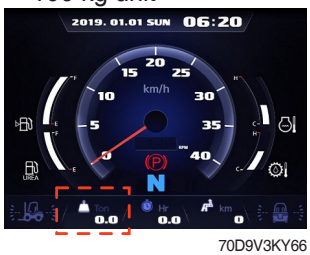

70D9V3KY66

· 10 kg unit

70D9V3KY67

f. Overload Alarm

1. Equipment

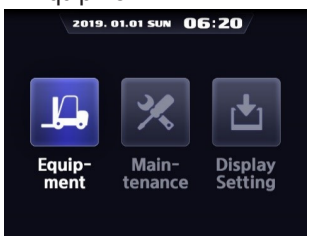

35D9VB3KY47

Enter to Equipment menu

2. Password

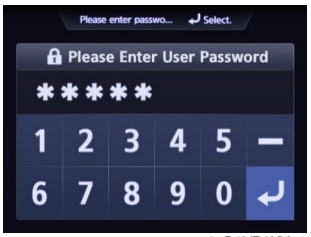

35D9VB3KY51

Enter the password

3. Weight Sensor Setting

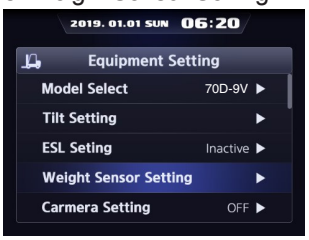

70D9V3KY56

Choose Weight Sensor Setting

4. Overload alarm

70D9V3KY68

Enter to Overload alarm.

5. Select

35D9VB3KY81

Select ON or OFF.

6. Completion

100D9VB3KY80

Setting has been completed.

⑤ Camera Setting (if installed)

- Device setup → Camera setup
- After set the reverse gear interoperation as ON, the screen will be changed from main screen to camera mode if put gear into reverse, and if the gear is changed, screen will be back to the main screen.

1. Equipment

35D9VB3KY47

Enter to Equipment.

2. Password

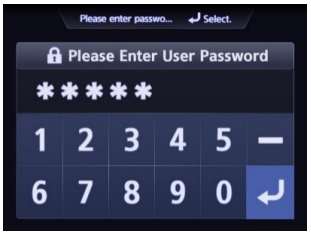

35D9VB3KY51

Enter the password

2. Camera Setting

70D9V3KY69

Choose Camera Setting and enter.

3. Reverse gear interworking

70D9V3KY70

Select ON or OFF.

4. Completion

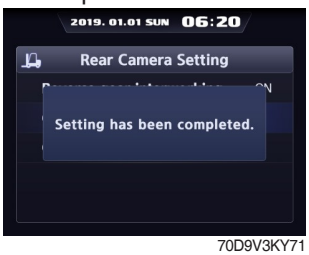

70D9V3KY71

Setting has been completed.

35D9VB3KY98

⑥ FingerTips Setting (option)

1. Equipment

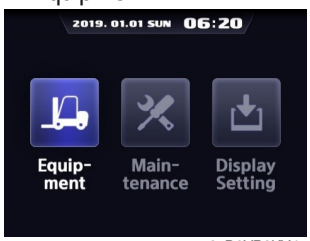

35D9VB3KY47

Enter to Equipment.

2. Password

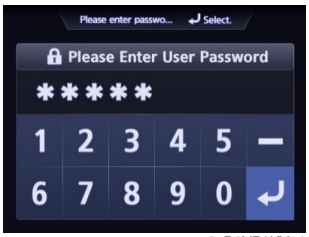

35D9VB3KY51

Enter the password

3. FingerTips Setting

70D9V3KY72

Choose FingerTips Setting and enter.

a. Lever Position Setting

1. Lever Position Setting

70D9V3KY73

Choose Lever Position Setting and Enter

2. Setting

70D9V3KY74

Set minimum and maximum value.

b. Lever Dead Zone Setting

1. Lever Dead Zone Setting

70D9V3KY75

Choose Lever Dead Zone Setting and enter.

2. Setting

70D9V3KY76

Set lever dead zone range.

c. Valve setting

3-3. Valve Setting

70D9V3KY77

Choose Valve Setting and enter.

4. Lift Section Valve

70D9V3KY78

In the Valve Setting, you can set the lift, tilt, AUX1, or AUX2 section valves

5. Setting.

70D9V3KY79

For each valve value, you can adjust the current value and time on the above screen

⑦ CSC (Curve Speed Control) Setting (if installed)

1. Equipment

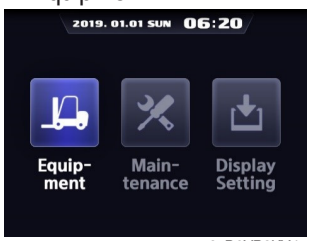

35D9VB3KY47

Enter to Equipment.

2. Password

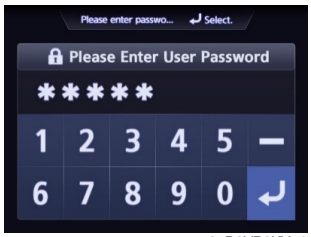

35D9VB3KY51

Enter the password

3. CSC Setting

70D9V3KY80

Choose CSC setting and enter.

4. Select

70D9V3KY81

Select ON or OFF.

5. Completion

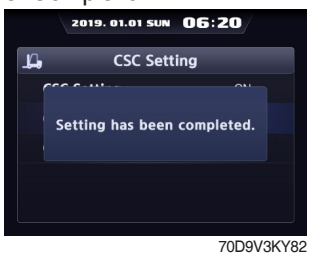

70D9V3KY82

Setting has been completed.

⑧ Auto Shift Setting (if installed)

Enable to turn the function ON or OFF or change the shift speed.

a. Mode Select

1. Equipment

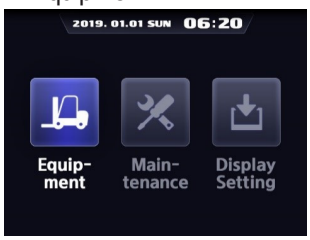

35D9VB3KY47

Enter to Equipment.

2. Password

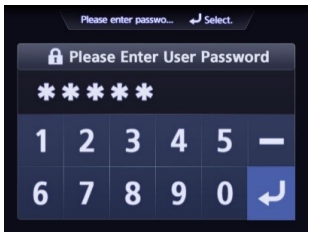

35D9VB3KY51

Enter the password

3. Auto Shift Setting

70D9V3KY83

Choose Auto Shift setting and enter.

4. Mode Select

70D9V3KY84

Choose Mode Select.

5. Select

70D9V3KY85

Select ON or OFF.

6. Completion

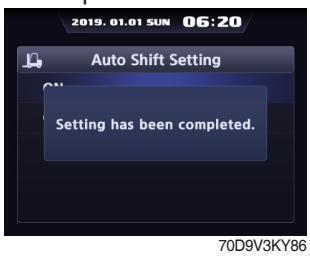

70D9V3KY86

Setting has been completed.

b. Speed Setting

- In case of 1st gear → 2nd gear, it is possible to set up to 7 ~ 10 km/h.
- In case of 2nd gear → 1st gear, it is possible to set up to 4 ~ 5 km/h.

※ **Depending on the model, the function can be turned on/off only by an external switch.**

3-2. Speed Setting

70D9V3KY87

Choose Speed Setting and enter.

4. Adjustment

70D9V3KY88

Change the speed value after selecting the shift point that needs to be changed

⑨ DCSR (Direction Change Shock Relief) setting (if installed)

- Set the mode ON. Below is how this feature functions.
- If you are driving at over the block drive speed and then change gear from forward to reverse (or reverse to forward), the gear stays as neutral until the truck reaches the restore drive speed.
- The truck changes direction and starts to travel.

※ **Restore drive speed can not be set over the block drive speed.**

1. Equipment

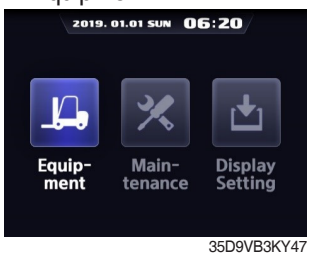

35D9VB3KY47

Enter to Equipment.

2. Password

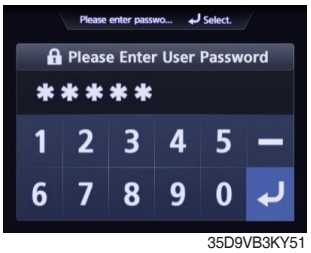

35D9VB3KY51

Enter the password

3. DCSR Setting

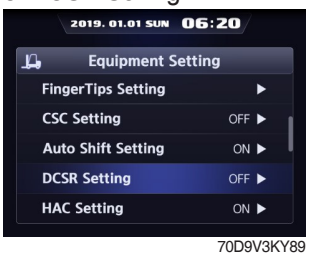

70D9V3KY89

Choose DCSR setting and enter.

4. Mode Select

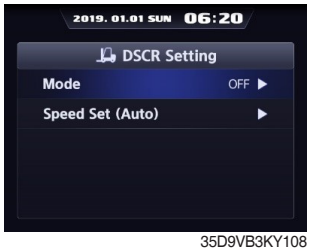

35D9VB3KY108

Select Mode Select.

5. Setting

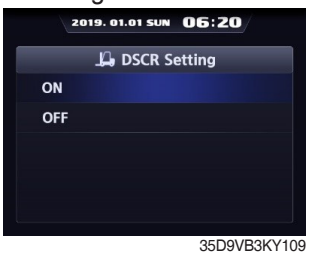

35D9VB3KY109

Select ON or OFF.

6. Completion

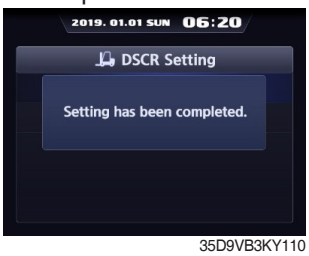

35D9VB3KY110

Setting has been completed.

7. Speed Setting

35D9VB3KY111

If you want to change speed setting, enter Speed Setting.

8. Drive Speed

35D9VB3KY112

Change speed.

⑩ HAC (Hill Assist Control) Setting (if installed)

If you are trying to drive in stop status on the hill, the truck does not move backward when the HAC setting is ON.

1. Equipment

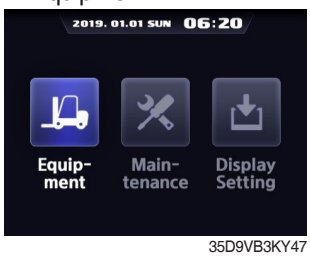

35D9VB3KY47

Enter to Equipment.

2. Password

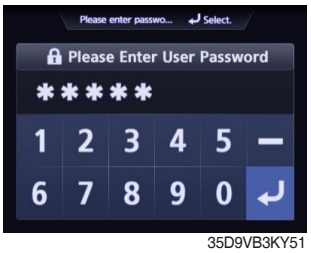

35D9VB3KY51

Enter the password

3. HAC Setting

70D9V3KY90

Choose DCSR setting and enter.

4. Select

70D9V3KY91

Select ON or OFF.

5. Completion

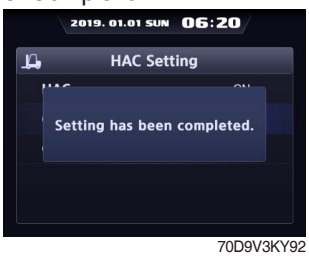

70D9V3KY92

Setting has been completed.

⑪ Vehicle Max Speed Limit

1. Equipment

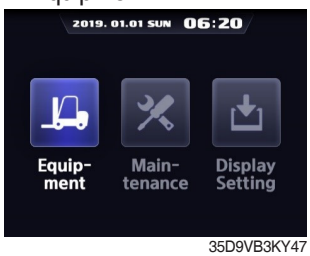

35D9VB3KY47

Enter to Equipment.

2. Password

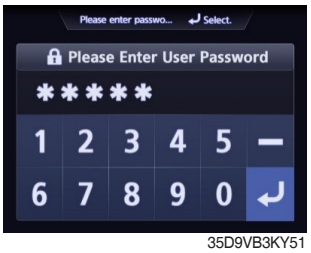

35D9VB3KY51

Enter the password

3. Vehicle Max Speed Limit

70D9V3KY93

Choose Vehicle Max Speed Limit and enter.

4. Mode

70D9V3KY94

Enter to Mode.

5. Select

70D9V3KY95

Select ON or OFF.

6. Completion

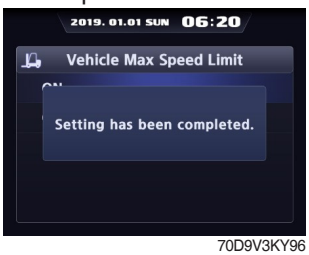

70D9V3KY96

Setting has been completed.

· Limit speed : 10 km/h

70D9V3KY97

The truck does not exceed the limit speed.

⑫ Zero Start Setting (if installed)

1. Equipment

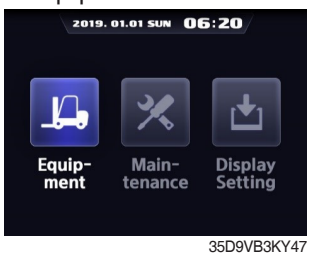

35D9VB3KY47

Enter to Equipment.

2. Password

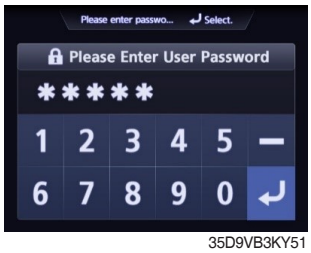

35D9VB3KY51

Enter the password

3. Zero Start Setting

70D9V3KY98

Choose Zero Start Setting and enter.

4. Select Sensitivity

100D9V3KY99

Select Sensitivity and pressthe enter.

5. Setting Sensitivity

100D9V3KY10

Change value using up/down button and press the enter

※ Default Sensitivity is 0.4% and it can be changed to maximum 4.8%

⑬ Clutch Protection Beep (if installed)

1. Equipment

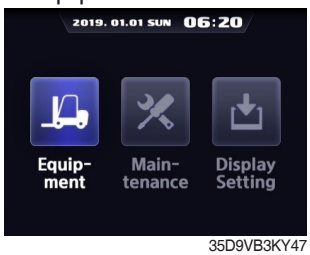

35D9VB3KY47

Enter to Equipment.

2. Password

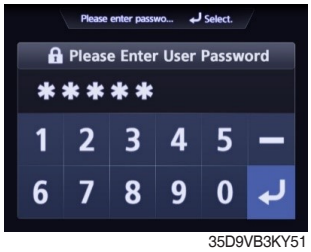

35D9VB3KY51

Enter the password

3. Clutch Protection Beep

70D9V3KY101

Choose Clutch Protection Beep and enter.

4. Select

70D9V3KY102

Select ON or OFF.

5. Completion

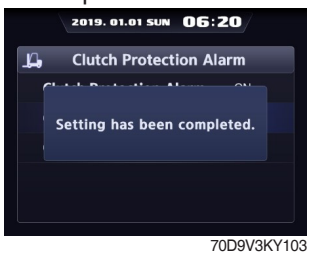

70D9V3KY103

Setting has been completed.

⑭ ZF TCU Calibration

Enable to calibrate the inching and clutch of the transmission.

※ **Depending on the model, the initial conditions for calibration may be different or the procedure may be automatically skipped.**

a. Inching Calibration

1. Equipment

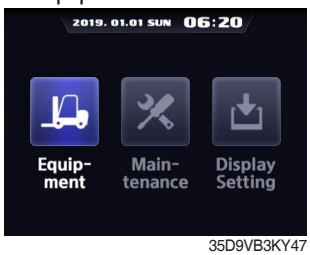

35D9VB3KY47

Enter to Equipment.

2. Password

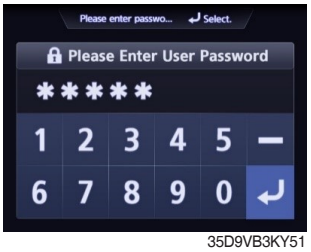

35D9VB3KY51

Enter the password

3. ZF TCU Calibration

70D9V3KY127

Choose ZF TCU Calibration and enter.

4. Prepare for Calibration

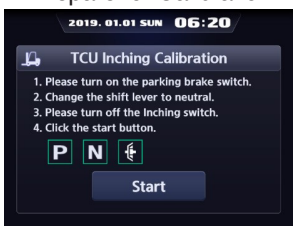

70D9V3KY128

Before starting calibration, turn on the parking switch, the gear neutral, and the inching switch off.

5. Calibration 1

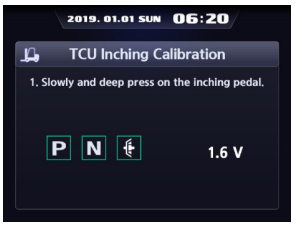

70D9V3KY129

Fully press the inching pedal.

6. Calibration 2

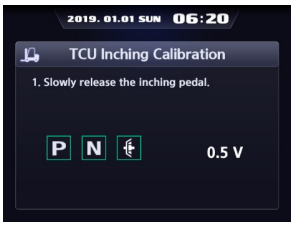

70D9V3KY130

Take your foot off the inching pedal.

7. Calibration 3

70D9V3KY131

Confirm the completion of calibration and press the ESC button or OK button to exit to the menu

b. Clutch Calibration

2-1. ZF TCU Calibration

70D9V3KY127

Choose ZF TCU Calibration and enter.

2. Password

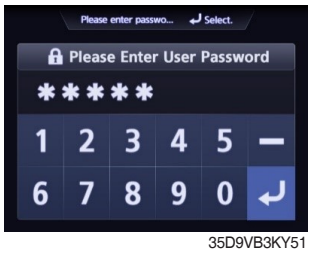

35D9VB3KY51

Enter the password

3. ZF TCU Calibration

70D9V3KY127

Choose ZF TCU Calibration and enter.

4. Prepare for Calibration

70D9V3KY185A

Before starting calibration, must be satisfied with 5 conditions.

※ **Conditions**

1) Engine RPM 800 to 1100
2) T/M temperature 60℃ to 90℃
3) Truck speed 0 km/h (stop)
4) Gear neutral
5) Parking swtich ON

5. Calibration 1

70D9V3KY186

Wait untill the next button is ON.

6. Calibration 1

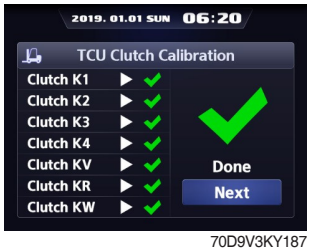

70D9V3KY187

Enter the next button.

7. Calibration 2

70D9V3KY188

Confirm the completion of calibration and press the ESC button or OK button to exit to the menu

⑮ Seat Belt Interlock (option)

1. Equipment

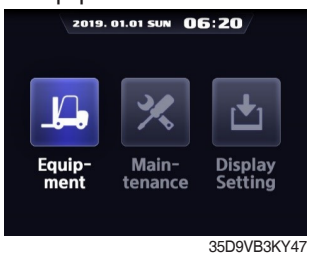

35D9VB3KY47

Enter to Equipment.

2. Password

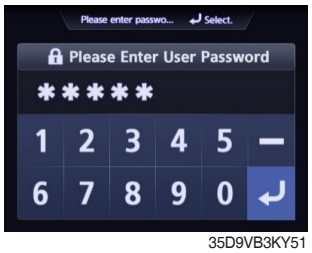

35D9VB3KY51

Enter the password (applied master password)

3. Seat Belt Interlock

70D9V3KY132

Choose Seat Belt Interlock and enter.

4. Select

70D9V3KY133

Select ON or OFF.

5. Completion

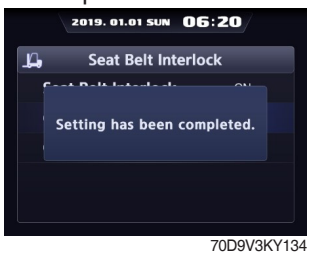

70D9V3KY134

Setting has been completed.

⑯ Cluster-CI

1. Equipment

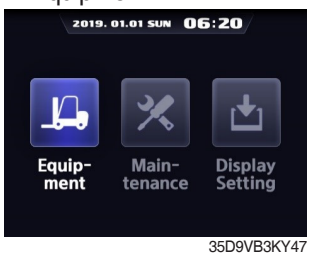

35D9VB3KY47

Enter to Equipment.

2. Password

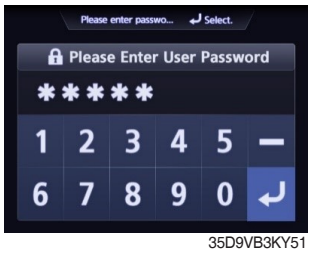

35D9VB3KY51

Enter the password

3. Version

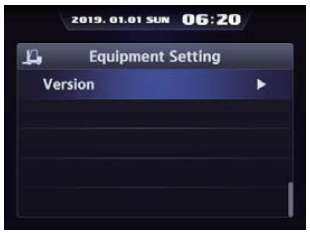

100D9V3KY136

Choose Version and enter.

4. Cluster-CI

70D9V3KY137

Choose Cluster-CI and enter.

5. Check Version

70D9V3KY138

(2) Maintenance

① Failure History

1. Maintenance

35D9VB3KY48

Enter to Maintenance.

2. Password

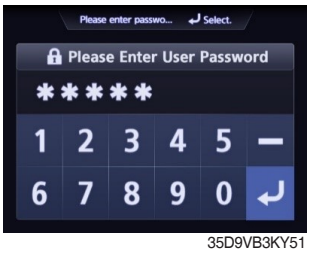

35D9VB3KY51

Enter the password

3. Failure History

70D9V3KY138

Choose Failure History and enter.

4. Engine or Transmission

70D9V3KY139

Choose what needs to check.

5. History

70D9V3KY140

6. Failure List

70D9V3KY141

② Consumables Management

- If the consumables replacement cycle has been passed, alarm will be displayed as ON.
- Press the 'Consumables replacement' if replaced the consumables.
- Information about recent replacement (maximum 9) will be displayed.
- If you want to change the cycle, please press the 'Change' button.

※ **Refer to page 7-12 about periodic replacement parts.**

1. Maintenance

35D9VB3KY48

Enter to Maintenance.

2. Password

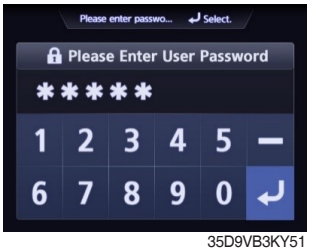

35D9VB3KY51

Enter the password

3. Consumables Mangement

70D9V3KY142

Choose Consumables Mangement and enter.

4. Select Replacement Item

70D9V3KY143

Select the replaced item.

5. Replacement History

70D9V3KY144

Select Replacement History.

6. Check.

70D9V3KY145

Check history.

7. Replacement

70D9V3KY146

Select Replacement.

8. Confirm

70D9V3KY147

Press enter button.

9. Change

70D9V3KY148

Select Change.

10. Setting Cycle

70D9V3KY149

Change properly the interval.

11. Completion

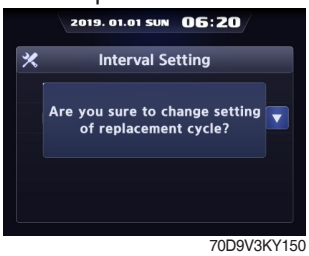

70D9V3KY150

Setting has been completed.

③ I/O Information

1. Maintenance

35D9VB3KY48

Enter to Maintenance.

2. Password

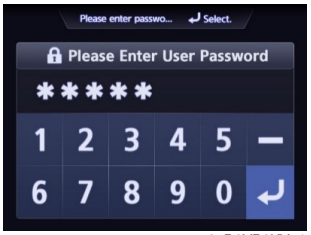

35D9VB3KY51

Enter the password

3. I/O Information

70D9V3KY151

Choose I/O Information and enter.

4. Analog signal

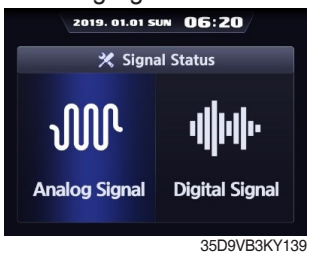

35D9VB3KY139

Enter to Analog Signal.

5. Analog signal list

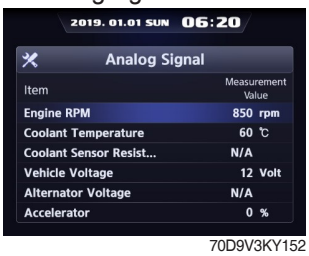

70D9V3KY152

Check the analog signal list.

6. Digital signal

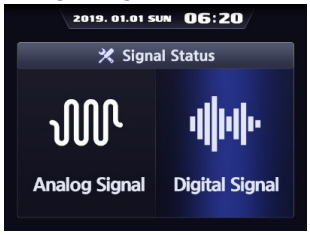

35D9VB3KY141

Enter to Digital Signal

7. Digital signal list

70D9V3KY153

Check the digital signal list.

(3) Display setting

① LCD Brightness Adjustment

- LCD brightness has two options. (Automatic and Manual modes)
- Manual mode always keeps the selected brightness.
- Brightness : Daytime 100%, Nighttime 50%
- Daytime/Nighttime time zone : 06 ~ 18

1. Display Setting

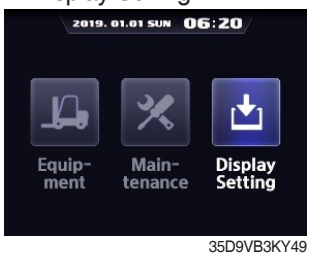

35D9VB3KY49

Enter to Display Setting.

2. LCD Brightness Adjustment

70D9V3KY154

Choose LCD Brightness Adjustment and enter.

3. LCD brightness

70D9V3KY155

Select Manual or Automatic.

4. LCD Brightness (Day/Night)

70D9V3KY156

Set day and night brightness in the manual mode.

5. LCD Brightness

35D9VB3KY148

Set LCD brightness in the manual mode.

② User Setting

Enable to set time, unit, and language.

1. Display Setting

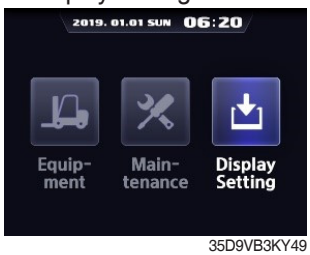

35D9VB3KY49

Enter to Display Setting.

2. User Setting

35D9VB3KY149

Choose User Setting and enter.

70D9V3KY158

Select Time Setting.

a. Time Setting

1. Time Setting

70D9V3KY158

Select Time Setting.

2. Setting

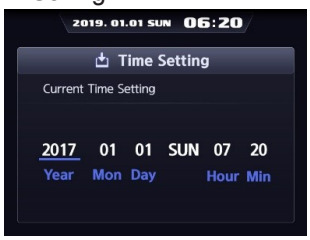

35D9VB3KY150

Set time.

b. Unit Setting

1. Unit Setting

70D9V3KY159

Select Unit Setting.

2. Unit Setting Litst

35D9VB3KY152

Enable to set the unit of speed, weight, temperature and pressure.

3. Setting

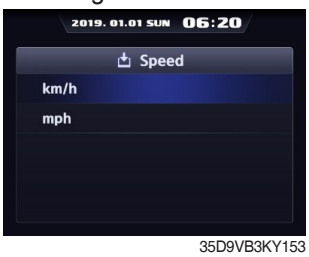

35D9VB3KY153

Set unit.

c. Language Setting

1. Language Setting

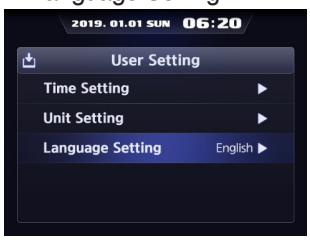

70D9V3KY160

Select Language Setting.

2. Setting

70D9V3KY161

Choose a language.

③ A/S Phone No.

1. Display Setting

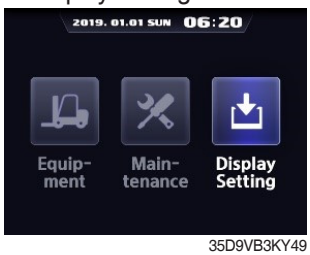

35D9VB3KY49

Enter to Display Setting.

2. A/S Phone No.

70D9V3KY162

Choose A/S Phone No. and enter.

3. Change

70D9V3KY163

Select phone number if you want to change.

4. New A/S Phone No.

70D9V3KY164

Enter new phone number using up or down buttons and press the enter button.

5. Finish

70D9V3KY165

Contact will be displayed as the modified number.

④ Password Change.

- This function is to allow to change password from default password to user defined password.
- Password length must be 5~10 digits.

※ **Since, if you forget the password, you must request the A/S, do not forget the password.**

1. Display Setting

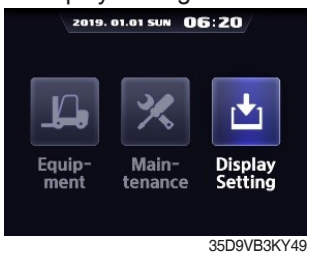

35D9VB3KY49

Enter to Display Setting.

2. Password Change

70D9V3KY166

Choose Password Change and enter.

3. User Password Change

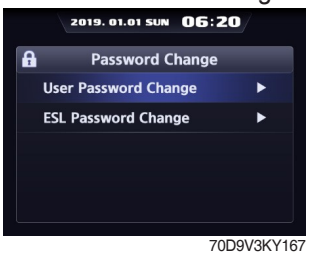

70D9V3KY167

Select User Password Change.

a. User Password Change

1. Current User Password

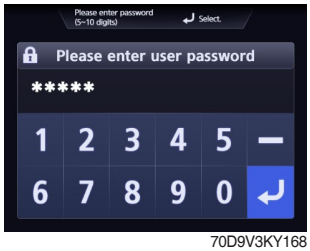

70D9V3KY168

Enter the current user passwrd.

2. New User Password

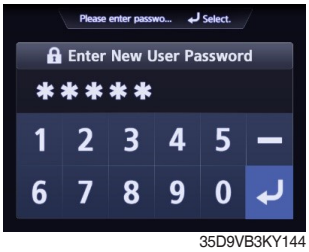

35D9VB3KY144

Enter a new user password.

3. Re-enter

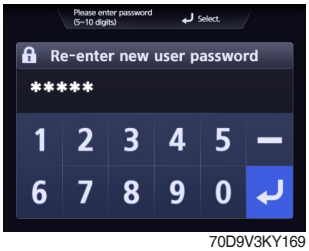

70D9V3KY169

Enter a new user password again.

b. ESL Password Change

1. Current User Password

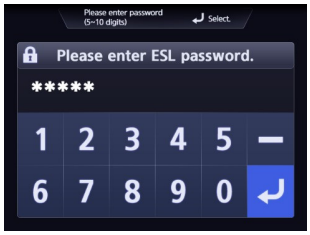

70D9V3KY166

Enter the current user password.

2. New User Password

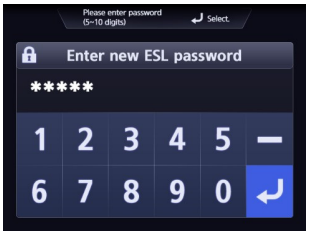

70D9V3KY167

Enter a new user password.

3. Re-enter

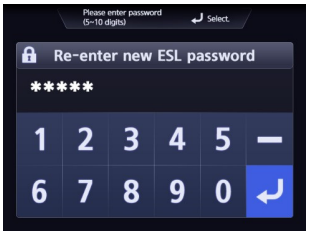

70D9V3KY168

Enter a new user password again.

⑤ Consumables Management

1. Display Setting

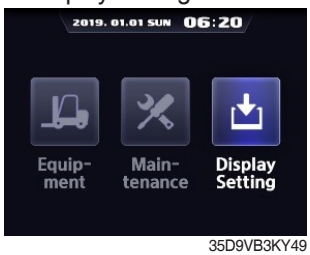

35D9VB3KY49

Enter to Display Setting.

2. Conusmables Management

70D9V3KY174

Choose Consumables Management and enter.

3. List

70D9V3KY143

8) CAUSES AND CORRECTION OF CLUSTER WARNING LAMP

No.	Warning lamp types	Symbol	Warning and indicator lamp	Causes and correction
1	Engine oil pressure warning		Engine oil pressure warning lamp	Engine oil pressure is low. Please fill the engine oil
2	Engine warm-up indicator		Engine warm-up indicator lamp	Warm-up will be started.
3	Air cleaner warning		Air cleaner warning lamp	Replace the air cleaner filter.
4	Water in fuel warning		Water in fuel warning lamp	Please drain the water of the fuel filter.
5	Engine check warning	CHECK	Engine check warning lamp	Check the failure code of cluster.
6	Engine stop warning		Engine stop warning lamp	Check the failure code of cluster.
7	Exhaust system cleaning warning		Exhaust system cleaning warning lamp	Exhaust system cleaning is required
8	Exhaust system cleaning inhibit warning		Exhaust system cleaning inhibit warning lamp	Exhaust system cleaning is inhibited
9	HEST warning		HEST warning lamp	High exhaust system temperature will be started.
10	Fuel warmer indicator		Fuel warmer indicator lamp	Warming up the fuel.
11	Transmission oil temperature warning		Transmission oil temperature warning lamp	T/M oil is over temperature condition. 110 ℃ (230 °F) or higher : Amber 120 ℃ (248 °F) or higher : Red
12	Parking brake indicator	P	Parking brake indicator lamp	Parking brake is the operational status.

No.	Warning lamp types	Symbol	Warning and indicator lamp	Causes and correction
13	Battery charging warning		Battery charging warning lamp	Battery is not being charged. Please check alternator and wiring.
14	Tilt lock indicator (if installed)	TILT LOCK	Tilt lock indicator lamp	Auto-leveling is the operational status.
15	OPSS indicator	OP SS	OPSS indicator lamp	OPSS is working : Driving, lifting, and tilting is locked or the truck is parked status.
16	Fuel level warning		Fuel level warning lamp	Fuel level is low. Please fill the fuel.
17	Coolant temperature warning		Engine coolant temperature warning lamp	Engine coolant is over temperature condition.
18	Clutch protection warm-ing		Clutch protection warming lamp	Clutch protection warning operation
19	Consumables replacement indicator		Consumables replacement indicator lamp	Consumables replacement cycle has been passed.
20	LH Turn indicator		LH Turning indicator lamp	-
21	RH Turn indicator		RH Turning indicator lamp	-
22	Forward gear	F F1 F2 F3	Forward gear, 1 gear, 2 gear, and 3 gear indicator lamp	-
23	Reverse gear	R R1 R2 R3	Reverse gear, 1 gear, 2 gear, and 3 gear indicator lamp	-
24	Communication error warning (ECU)	COMM ERROR Cluster-CI ↔ ECU	Communication error warning lamp	Communication between cluster-CI and ECU has been failed. Check communication line.
25	Communication error warning (FSCU)	COMM ERROR Cluster-CI ↔ TCU	Communication error warning lamp	Communication between cluster-CI and FSCU has been failed. Check communication line.
26	DEF low warning	UREA	DEF low warning lamp	DEF levle is low. Please fill the DEF.
27	Brake fail warning		Brake fail warning lamp	Stop the engine and check for its cause.
28	Side mirror heated indicator	SIDE	Side mirror heated pilot lamp	Side mirror heated operation
29	Seat belt reminder		Seat belt reminder lamp	Please wear seat belt

5. SWITCHES

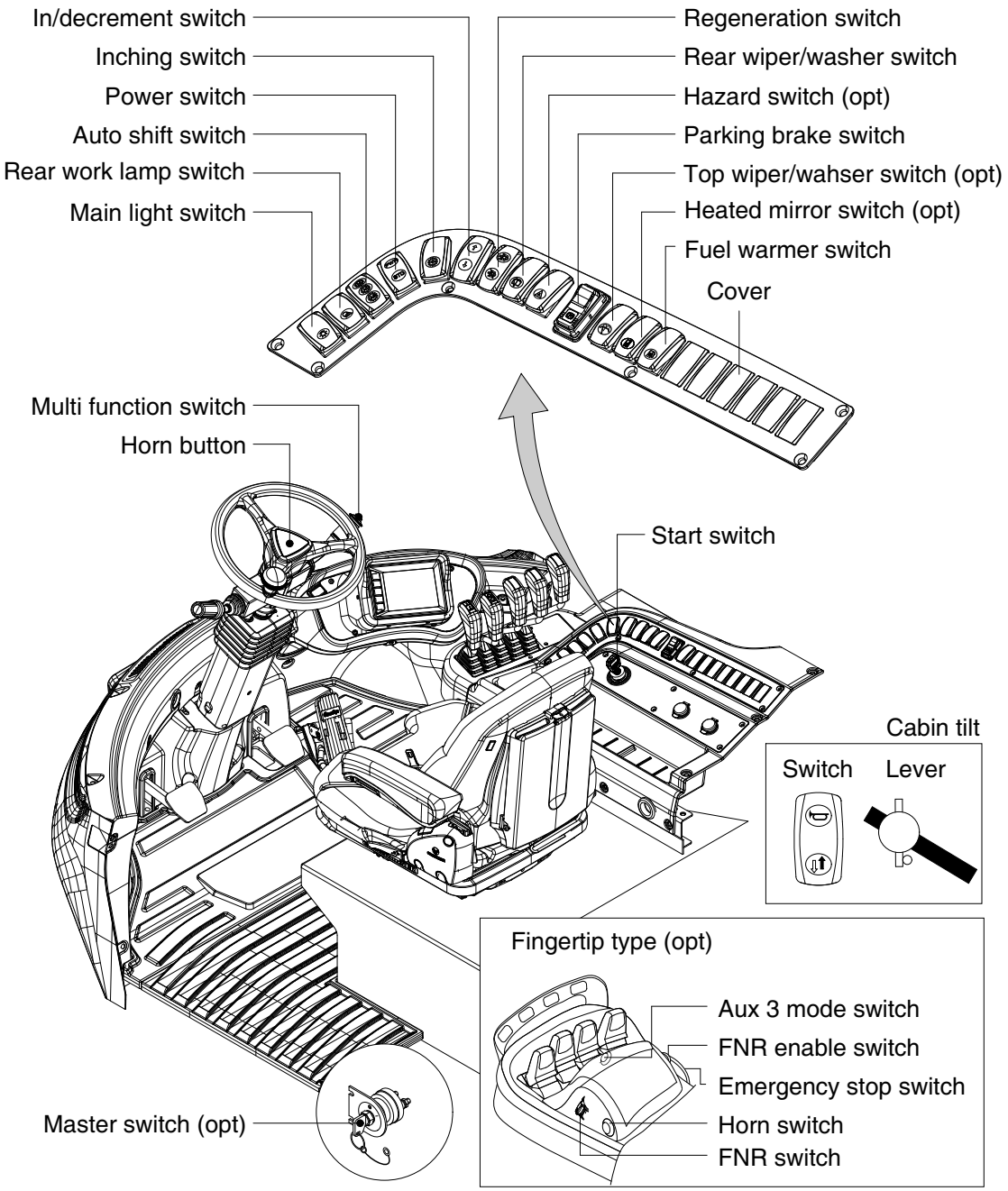

100D9V3KY03

1) START SWITCH

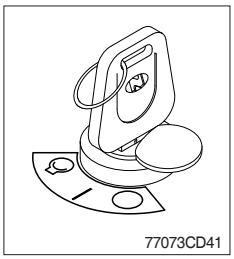

(1) There are three positions, OFF, ON and START.

- ◯ (OFF) : Position to stop the engine. Insert or remove the ignition key from this position.
- | (ON) : The operation of the electrical device. It is located right next to the OFF position clockwise.
- (START) : Engine ignition position. It is located clockwise from the ON position.

※ **Release the ignition key after the engine is ignited to automatically return to the ON position.**

※ **To switch the engine back on, return the key to the OFF position and then turn it to the START position.**

※ **If the gear selector lever is not in the neutral position, the engine will not ignite.**

2) PARKING BRAKE SWITCH

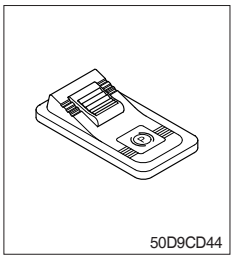

(1) This switch is used to parking brake lock or release.

(2) If this switch is pressed, the parking brake is applied and the warning lamp on the cluster will comes ON.

※ **When operating the gear selector lever, be sure to release the parking brake. If the truck is operated with the parking brake engaged, the brake will overheat and may cause the brake system to go out of order.**

3) MAIN LIGHT SWITCH

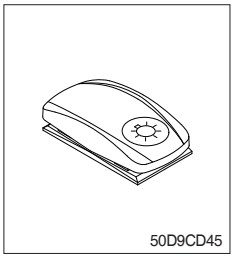

(1) This switch is used to operate the head light by one steps.

① First step : Tail lamp comes ON.

② Second step : Head lamp comes ON.

4) AUTO SHIFT SWITCH

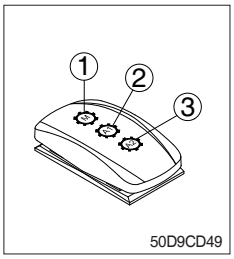

(1) Manual mode (①)

Press the top of the switch for the manual mode of the autoshift function. The operator selects the desired speed and the desired direction in the manual mode with the gear selector lever.

(2) Automatic 1st mode (②)

Place the switch in the middle position for the autoshift function changing from 1st to 3rd gear shift mode.

(3) Automatic 2nd mode (③)

Press the bottom of the switch fully for the autoshift function changing from 2nd to 3rd gear shift mode.

5) POWER SWITCH

(1) This switch offers two selectable operating mode.
The operator can adjust the truck's performance with this selection switch.

(2) Function

① STD MODE
This mode provides maximum fuel efficiency for general loading.

② PWR MODE
This mode provides maximum power output for heavy loading or hill climb.

6) INCHING SWITCH

(1) If this switch is pressed, the inching operation is applied to inching pedal.

(2) Also, the inching lamp on the cluster is illuminated.

7) IN/DECREMENT SWITCH

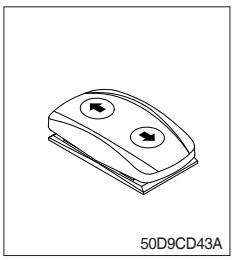

(1) When engine running, the low rpm of engine increase or decrease by 25 rpm by operating this switch.

8) REAR WIPER AND WASHER SWITCH

(1) This switch is used to operate the wiper and washer on the rear of the cab.

(2) The washer liquid is sprayed and the wiper is operated only while pressing this switch.

9) EXHAUST SYSTEM CLEANING SWITCH

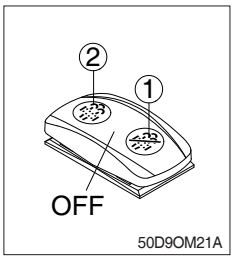

(1) This switch is used to select the cleaning function of the exhaust system.

(2) Inhibit position (①)

① The inhibit position disallows any automatic or manual exhaust system cleaning.

② This may be used by operator to prevent exhaust system cleaning when the truck is operating in a hazardous environment is concerned about high temperature.

③ It is strongly recommended that the this position is only activated when high temperatures may cause a hazardous condition.

(3) OFF position

This position will initate a automatic exhaust system cleaning when needed.

(4) Manual position (②)

① This position will only initate a manual exhaust system cleaning and the exhaust system cleaning lamp is illuminated.

② HEST lamp will be illuminated during the entire exhaust system cleaning.

※ Refer to the page 3-11 for details.

※ This switch return to the OFF position when released the manual position (②).

10) REAR WORK LAMP SWITCH

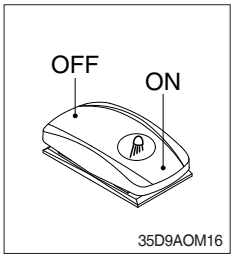

(1) This switch is used to operate the work lamps. Press this switch to turn on work lamps.

11) HAZARD SWITCH (OPTION)

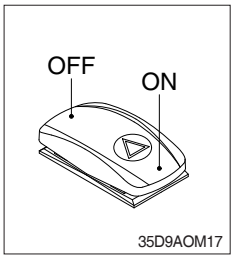

(1) Use for parking, or loading truck.

※ If the switch is left ON for a long time, the battery may be discharged.

12) TOP WIPER AND WASHER SWITCH (OPTION)

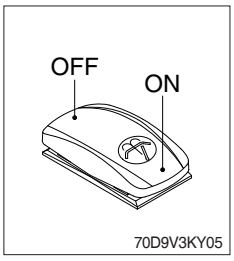

(1) This switch is used to operate the wiper and washer on the top of the cab.

(2) The washer liquid is sprayed and the wiper is operated only while pressing this switch.

13) HORN BUTTON

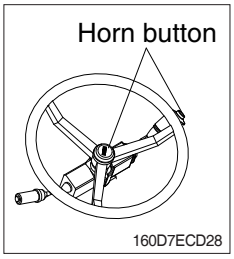

(1) If you press the button on the top of the multifunction switch and the center of the steering wheel, the horn will sound.

14) MULTI FUNCTION SWITCH

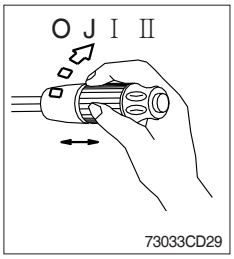

(1) Front wiper and washer switch

① When the switch is in J position, the wiper moves intermittently.

② When placed in Ⅰ or Ⅱ position, the wiper moves continuously.

③ If you push the grip of the lever, washer liquid will be sprayed and the wiper will be activated 2-3 times.

※ **Check the quantity of washer liquid in the tank. If the level of the washer liquid is LOW, add the washer liquid (In cold, winter days) or water. The capacity of the tank is 1 liter.**

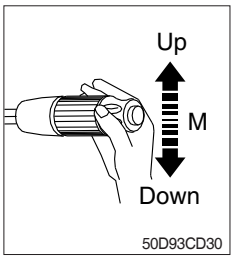

(2) Dimmer switch

① This switch is used to turn the head light direction.

② **Switch positions**

- Up : To flash for passing
- Middle : Head light low beam ON
- Down : Head light high beam ON

③ If you release the switch when it's in up position, the switch will return to middle.

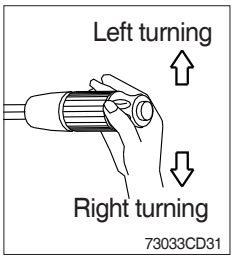

(3) Turning switch

① This switch is used to warn or signal the turning direction of the truck to other trucks or equipment.

② Push the lever up for turning left, pull the lever down for turning right.

15) MASTER SWITCH (option)

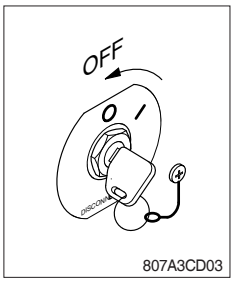

(1) This switch is used to shut off the entire electrical system.
When the machine is not operated for a long time, turn OFF the master switch for the safety purpose.

(2) I : The battery remains connected to the electrical system.
O : The battery is disconnected to the electrical system.

※ **Never turn the master switch to O (OFF) with the engine running. Engine and electrical system damage could result.**

16) CABIN TILT SWITCH

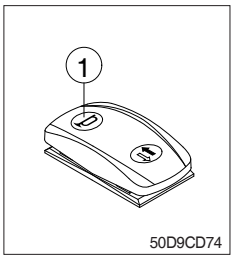

(1) Horn ( )
By pressing position ①, the horn sounds and by releasing, the horn stops.

⚠ **Sound the horn to warn near by personnel, before tilting the cabin.**

(2) Tilting of the cabin (,)
Press the cabin tilt switch in order to tilt the cabin to right side or return to original location.

※ **Refer to page 7-16 for the tilting method of the cabin.**

17) HAND PUMP LEVER

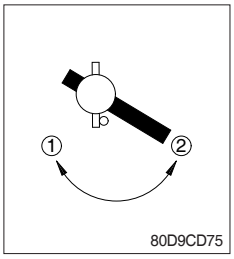

(1) This lever is used when tilting the cabin.
(2) Turn the hand pump lever to clockwise direction (①), the cabin shall be tilted to right side by the cabin tilt switch.
(3) Turn the hand pump lever to counterclockwise direction (②), the cabin shall be returned to original location by the cabin tilt switch.

18) HEATED MIRROR SWITCH (option)

(1) This switch is used to supply heating to side mirrors.
(2) Turn off the switch when ten minutes elapsed from the switch on or press the switch once more.

※ **When the heated mirror is operating, the lamp lights ON.**

19) FUEL WARMER SWITCH

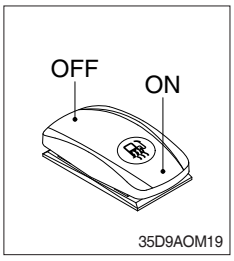

(1) This switch is used to heat the fuel of pre-heater.

20) FNR ENABLE SWITCH (option)

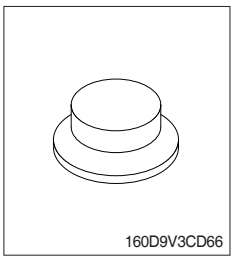

(1) This switch makes FNR to enable when the fingertip is equipped as an option.

21) FNR SWITCH (option)

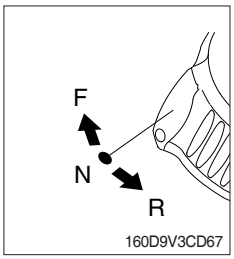

(1) This switch changes travel direction of truck only when the FNR enable switch is selected ON.
- · F : Truck moves forward
- · N : Neutral position
- · R : Truck moves backward

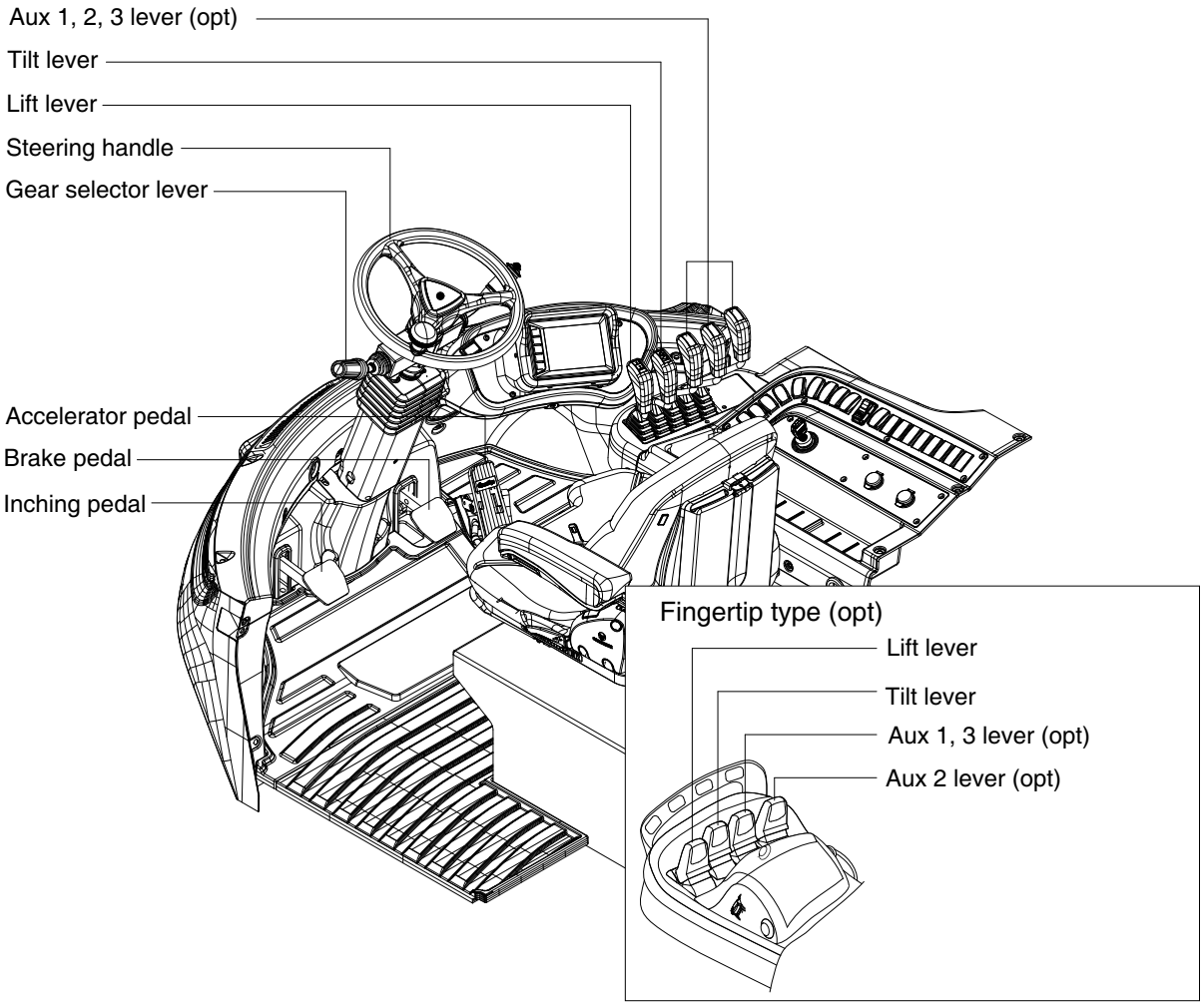

100D9V3KY04

1) LIFT LEVER

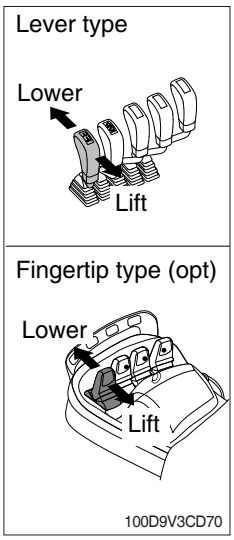

(1) LIFT

PULL the lever BACK to LIFT the forks.

(2) LOWER

PUSH the lever FORWARD to LOWER the load.

(3) HOLDING

When the lever is released, the lifting or lowering action stops.

※ Lifting speed is controlled by the lift lever and the accelerator pedal.
Lowering speed is controlled by the lift lever only.

2) TILT LEVER

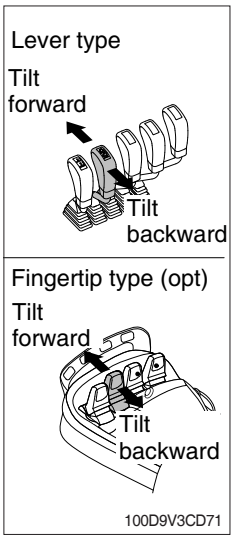

(1) TILT FORWARD

PUSH the lever FORWARD to tilt mast FORWARD.

(2) TILT BACKWARD

PULL the lever BACK to tilt mast BACKWARD.

(3) HOLDING

When the lever is released, tilting action stops.

※ **Forward and backward tilting speeds are controlled by the tilt lever and the accelerator pedal.**

3) LEVER FOR SIDE SHIFT

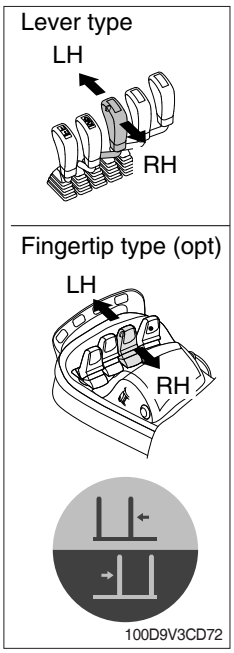

(1) LH MOVEMENT

Push the lever forward to move the side shift to the left hand.

(2) RH MOVEMENT

Pull the lever backward to move the side shift to the right hand.

4) LEVER FOR SIDE SHIFT WITH FORK POSITIONER

(1) FORK POSITIONER (SYNCHRONIZER TYPE)

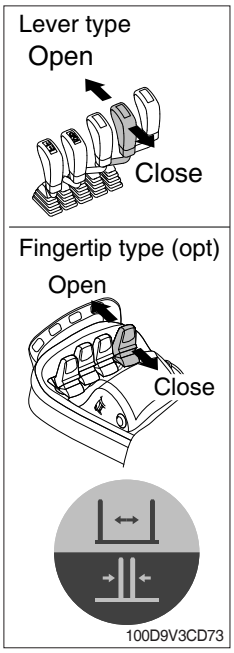

① OPEN THE FORKS

Push the lever forward to open both forks simultaneously.

② CLOSE THE FORKS

Pull the lever backward to close both forks simultaneously.

(2) FORK POSITIONER (INDEPENDENT TYPE)

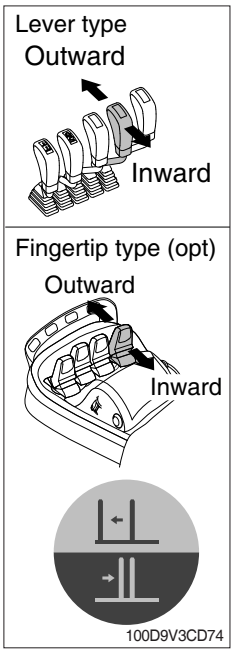

① LH FORK MOVEMENT

- Push the lever forward to move the LH fork outward.
- Pull the lever backward to move the LH fork inward.

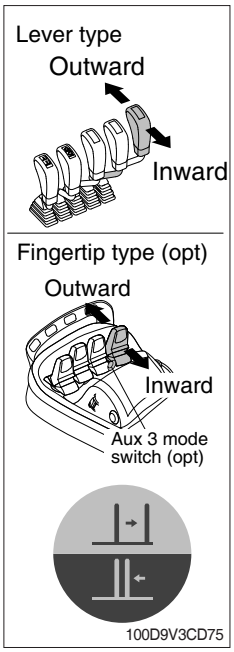

② RH FORK MOVEMENT

- Push the lever forward to move the RH fork outward.
- Pull the lever backward to move the RH fork inward.

※ **Operate the aux 2 lever while holding down the aux 3 mode switch.**

5) GEAR SELECTOR LEVER

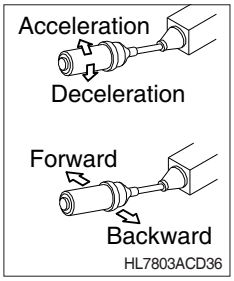

(1) This lever is used for gear selection, forward 3 stages and reverse 3 stages.

(2) If you push the gear selector lever, the truck moves forward, but pulling the gear selector lever, the truck moves backward.

(3) If you turn the gear selector lever forward, the truck increases the speed, but if you turn the gear selector lever backward, the truck reduces the speed.

6) STEERING HANDLE

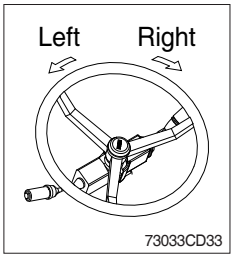

(1) A steering cylinder in the center of the steering axle will operate the steering function.

(2) Turning the steering wheel left, the truck moves to the left side and turning it right, the truck moves to the right side.

7) ACCELERATOR PEDAL

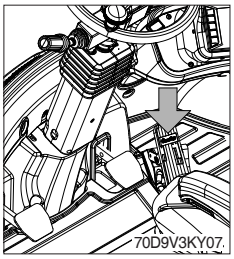

(1) This pedal controls the engine speed. The engine speed will increase in proportion to the degree of force applied to this pedal.

(2) Unless this pedal is pressed, the engine will run at low idling.

8) BRAKE PEDAL

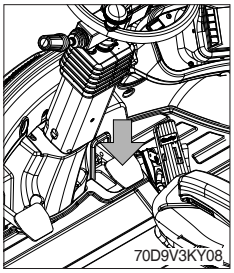

(1) If the pedal is pushed, braking force is generated and bring the truck to a stop.

※ **Do not operate the truck with stepping on the brake pedal unnecessarily, or bring premature wear of brake disc.**

9) INCHING PEDAL

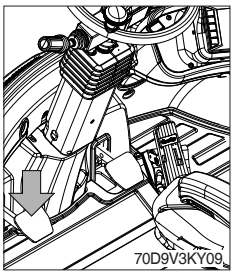

(1) Inching pedal is used for fine control of forward and reverse movement when lifting up or putting down loads.

※ **Do not put your foot on the inching pedal or brake pedal unless using it.**

10) STEERING COLUMN ADJUST LEVER

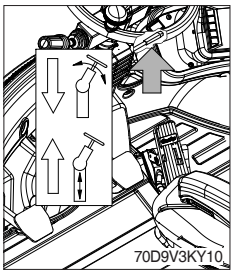

(1) By pulling down the lever, the handle is adjustable to tilt.

(2) By pulling up the lever, the handle is adjustable to telescope.

(3) Adjustable steering handle; Accommodates the various conditions of the operator.
- Tilting abgle : 40˚
- Telescopic stroke : 80 mm

11) BODY WING COVER

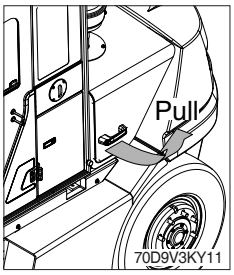

(1) Pull the handle attached on the body wing cover to open it.

※ **Keep the body wing cover closed when open the cabin doors.**

7. AIR CONDITIONER AND HEATER

Full auto air conditioner and heater are equipped for pleasant operation against outside temperature and defrost on window glass.

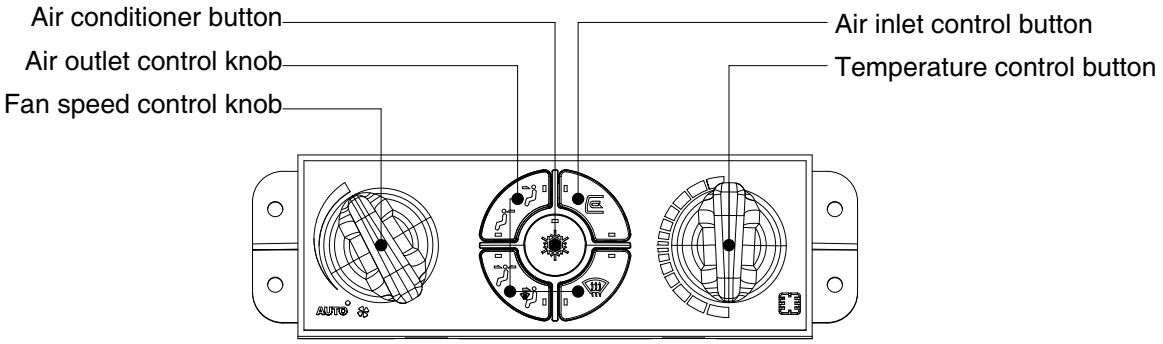

Air conditioner and heater controller

70D9V3KY12

1) AIR CONDITIONER BUTTON

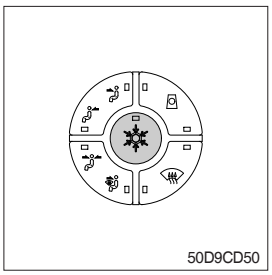

(1) When you push this button, air conditioner system is operated.

(2) Determines whether to perform a cooling function of air conditioner.

① Pilot lamp ON : Air conditioner operation

② Pilot lamp OFF : Fan only

※ **The AUTO pilot lamp ON when this button is pushed.**

2) AIR OUTLET CONTROL BUTTON

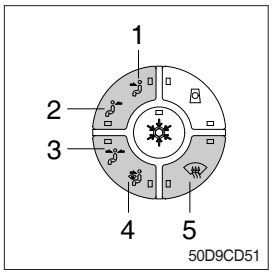

There are five kinds of air flow.

① Face

② Rear

③ Face and rear

④ Face and defrost

⑤ Defrost

※ **The pilot lamp is turned ON when the button is pushed.**

3) TEMPERATURE CONTROL KNOB

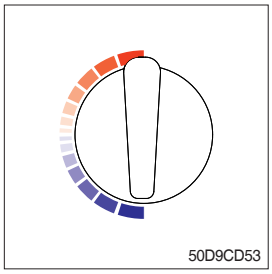

This knob regulates the temperature of air.

① Right rotation (red zone) : Heat up air temperature

② Left rotation (blue zone) : Cool down air temperature

4) AIR INLET CONTROL BUTTON

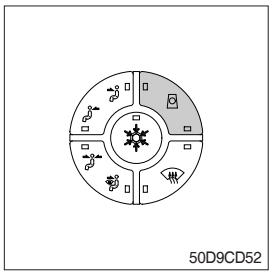

This button regulates the inlet air.

① Pilot lamp ON : Fresh air intake.

② Pilot lamp OFF : The air circulates in the cab.

※ **The pilot lamp is turned ON when the button is pushed.**

※ **Check out the fresh air filter periodically to keep a good efficiency.**

※ **Change air occasionally when using recirculation for a long time.**

※ **Check out the recirculation filter periodically to keep a good efficiency.**

5) FAN SPEED CONTROL KNOB

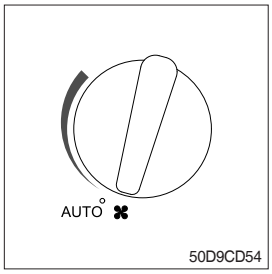

① Fan speed is controlled automatically by set temperature.

※ **The AUTO pilot lamp ON when the air conditioner button is pushed.**

② This knob controls fan speed manually.

※ **The AUTO pilot lamp OFF when this knob is operated.**

③ This knob makes the system ON.

Error	Meaning
Ambient sensor open	1. Check assembly status.
Ambient sensor short	2. Ambient temperature sensor exchange after single item check.
In-cabin temperature sensor open	1. Check assembly status.
In-cabin temperature sensor short	2. In-cabin temperature sensor exchange after single item check.
Evap. sensor open	1. Check assembly status.
Evap. sensor short	2. Evap. sensor exchange after single item check.
Water valve sensor open	1. Check assembly status. 2. Mix actuator exchange after single
Gauge pressure circuit error	1. Check assembly status. 2. Please refer to the type of fault diagnosis using gauge. 3. Failure diagnosis and measures. Failure diagnosis of gauge type.

8. OTHERS

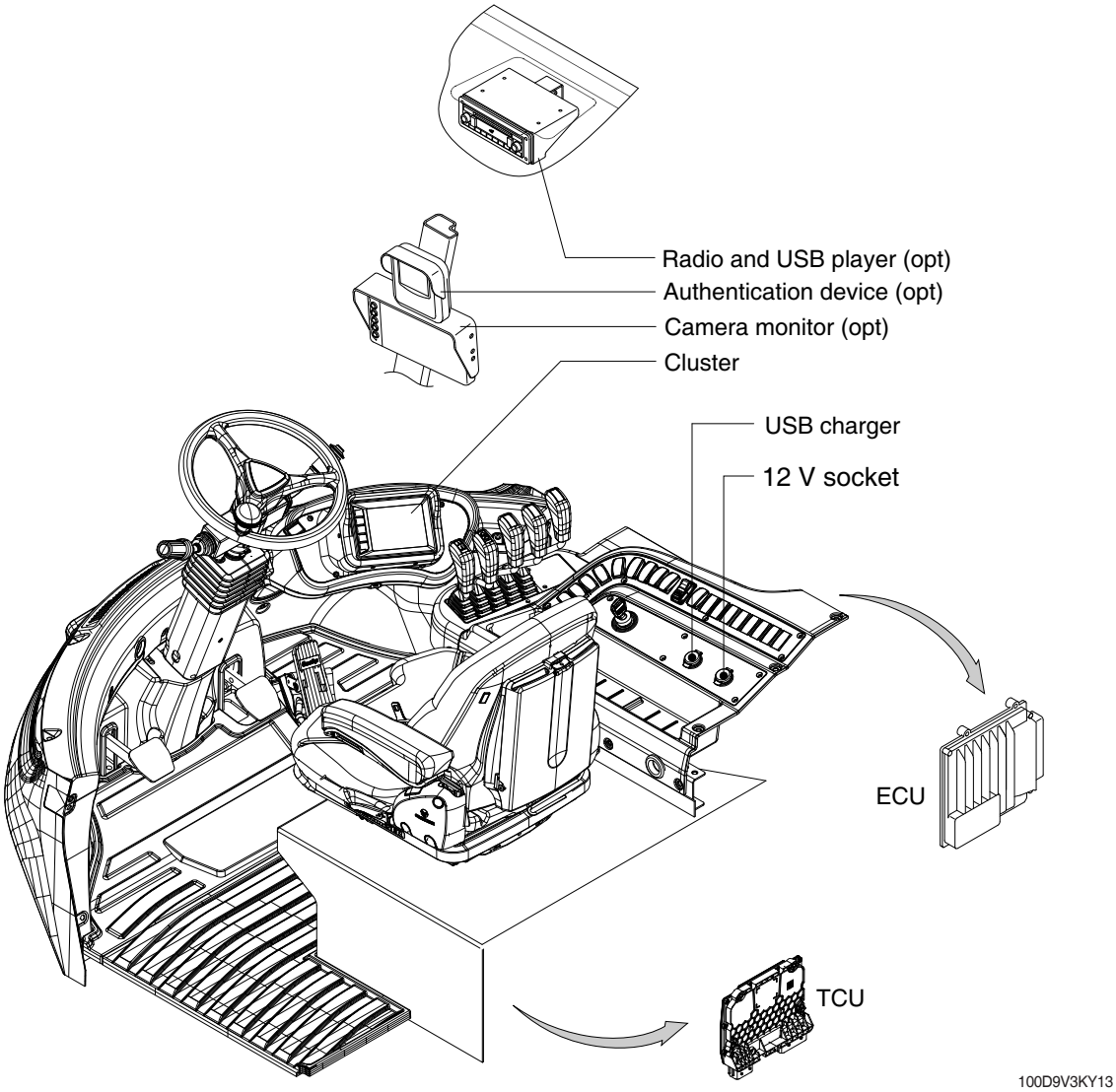

1) 12V SOCKET

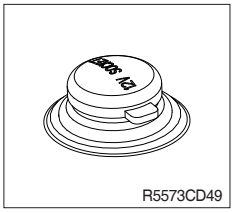

(1) Utilize the power of 12 V as your need and do not exceed power of 12 V, 120 W.

2) USB CHARGER

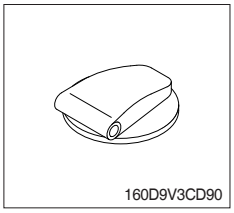

(1) This is possible to use a USB cable to connect a device to a power supply.

3) TRANSMISSION CONTROL UNIT (TCU)

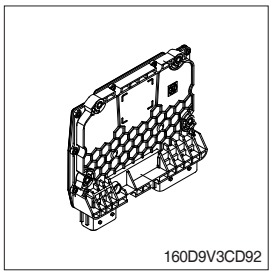

(1) The control unit is shifting the required speeds fully-automatically under consideration of the following criteria.

· Gear selector lever position
· Driving speed
· Load level

4) ENGINE CONTROL MODULE (ECM)

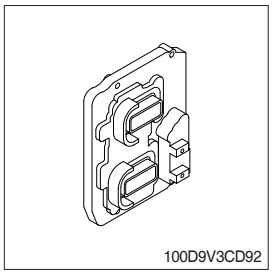

The engine control module (ECM) is the control center of the engine system.

5) CLUSTER

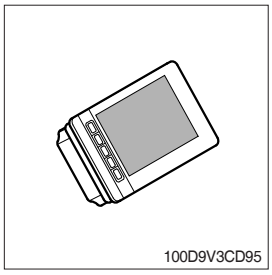

It consists of electronic parts and controls all lamps and buzzers on cluster in accordance with signals transmitted from the switches, the ECM, TCU, the engine and the hydraulic pressure sensors.

6) AUTHENTICATION DEVICE (option)

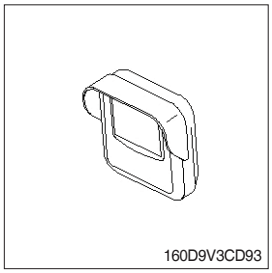

(1) This is used for RF ID tagging by touching the ID card or entering pin number as an option.
Also, it is possible to manage driver and safety.

※ **Refer to page 3-91 for details.**

7) RADIO AND USB PLAYER (WITH BLUETOOTH, OPTION)

9403CD100

■FRONT PANEL PRESENTATION

1 ····· Power ON/OFF,
Volume UP/DOWN button

2 ····· Manual UP/DOWN Tuning,
File search, SEL button

3 ····· Mode button,
Audio mute button

4 ····· Call & Pair button

5 ····· Call end button

6 ····· Station preset 1
DIS ····· Display button

7 ····· Station preset 2

8 ····· Station preset 3
RPT ····· Repeat play button

9 ····· Station preset 4
RDM ····· Random play button

10 ····· Station preset 5
DIR- ····· Directory down button

11 ····· Station preset 6
DIR+ ····· Directory up button

12 ····· Scan play button (SCAN)
Best station memory (BSM) button

13 ····· Auto tune up, Seek up button

14 ····· Auto tune down, Track down button

15 ····· USB connector

16 ····· AUX IN Jack

17 ····· MIC hole

RADIO AND USB PLAYER (WITHOUT BLUETOOTH, OPTION)

9403CD101

■FRONT PANEL PRESENTATION

1 ····· Power ON/OFF,
Volume UP/DOWN button

2 ····· Manual UP/DOWN Tuning,
File search, SEL button

3 ····· Mode button,
Audio mute button

4 ····· Radio seek up button

5 ····· Radio seek down button

6 ····· Station preset 1
DIS ····· Display button

7 ····· Station preset 2

8 ····· Station preset 3
RPT ····· Repeat play button

9 ····· Station preset 4
RDM ····· Random play button

10 ····· Station preset 5
DIR- ····· Directory down button

11 ····· Station preset 6
DIR+ ····· Directory up button

12 ····· Scan play button (SCAN)
Best station memory (BSM) button

13 ····· Track up button

14 ····· Track down button

15 ····· USB connector

16 ····· AUX IN Jack

■GENERAL

(1) Power and volume button

9403CD102

① **Power ON / OFF button**

Press power button (1) to turn the unit on or off.

② **Volume UP/DOWN control knob**

Turn VOL knob (1) right to increase the volume level.
Turn VOL knob (1) left to decrease the volume.
After 5 seconds the display will return to the previous display mode.

③ **Initial volume level set up**

I-VOL is the volume level the unit will play at when it is next turned on. To adjust the I-VOL level, press and hold VOL button (1) for longer than 2 seconds. The current volume level displays on the display panel.
Then turn button (1) right or left to set the volume level as the I-VOL level.

④ **Clock ON/OFF control**

The CLOCK was default at off status. To turn CLOCK ON, press and hold VOL button (1) for longer than 2 seconds to display I-VOL, then short press VOL again, turn VOL knob while CLOCK OFF display, then the CLOCK ON will be displayed.

※ **Due to time tolerance, the clock display on the Audio unit might have slight difference.**

⑤ **Clock adjustment**

With CLOCK ON selected, press VOL knob again after CLOCK ON display, the hour will blink, turn VOL knob right or left to adjust hour. Simply press VOL again, the minute will blink, turn VOL knob to adjust minute. Then press VOL again to confirm the clock once finished.

(2) Menu Selection

9403CD103

① This button can adjust the effect of the sound and other things. Each time you press this button (2), LCD displays as follows :

BAS ➔ TREB ➔ BAL L=R ➔ FAD F=R➔ EQ ➔ LOUD ON➔ BEEP 2ND

On each setting, the level can be controlled by turning TUNE knob (2). When the last adjustment is made, after 5 seconds, the display will automatically return to the previous display mode.

② **Bass control**

To adjust the bass tone level, first select the bass mode by pressing SEL button (2) repeatedly until BASS appears on the display panel. Then turn knob (2) right or left within 5 seconds to adjust the bass level as desired. The bass level will be shown on the display panel from a minimum of BASS-7 to a maximum of BASS+7.

③ **Treble control**

To adjust the treble tone level, first select the treble mode by pressing SEL button (2) repeatedly until TREB appears on the display panel. Then turn knob (2) right or left within 5 seconds to adjust the treble level as desired. The treble level will be shown on the display panel from a minimum of TREB -7 to a maximum of TREB +7.

④ **Balance control**

To adjust the left-right speaker balance, first select the balance mode by pressing SEL button (2) repeatedly until BAL indication appears on the display panel. Then turn knob (2) right or left within 5 seconds to adjust the balance as desired. The balance position will be shown by the bars on the display panel from BAL 10R (full right) to BAL 10L (full left).

⑤ **Fader control**

To adjust the front-rear speaker balance, first select the fader mode by pressing SEL button (2) repeatedly until FADER indication appears on the display panel. Then turn knob (2) right or left within 5 seconds to adjust the front-rear speaker level as desired. The fader position will be shown by the bars on the display panel from FAD 10F (full front) to FAD 10R (full rear).

⑥ **EQ control**

You can select an equalizer curve for 4 music types (CLASSIC, POP, ROCK, JAZZ). Press button (2) until EQ is displayed, then turn knob (2) right or left to select the desired equalizer curve. Each time you turn the knob, LCD displays as follows :

EQ OFF ➔ CLASSIC ➔ POP ➔ ROCK ➔ JAZZ

※ **When the EQ mode is activated, the BASS and TREBLE modes are not displayed.**

⑦ Loud control

When listening to music at low volume levels, this feature will boost the bass and treble response. This action will compensate for the reduction in bass and treble performance experienced at low volume.

To select the loudness feature, press button (2) until LOUD is displayed, then turn knob (2) right or left to activate or deactivate loudness.

⑧ Beep control

To adjust the BEEP mode, first select the BEEP mode by pressing button (2) repeatedly until BEEP indication appears on the display panel. Then turn knob (2) left or right within 5 seconds to select BEEP 2ND, BEEP OFF or BEEP ON.

· BEEP 2ND : You will only hear the beep sound when the buttons are held down for more than 2 seconds.
· BEEP OFF : You can not hear the sound beep when you press the buttons.
· BEEP ON : You can hear the beep sound each time you press the buttons.

(3) Mute control

① Press and hold MUTE button (3) for over 2 seconds to mute sound output and MUTE ON will blink on the LCD. Press the button again to cancel MUTE function and resume to normal playing mode.

(4) Mode selection

① Repeat press MODE button (3) to switch between FM1, FM2, AM, USB, AUX, BT MUSIC.

※ If there is no USB, AUX, Bluetooth Phone connected, it would not display USB, AUX, BT when you press button (3).

■RADIO

(1) Mode button

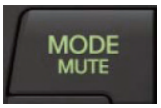

9403CD104

① Repeat press MODE button to select FM1, FM2 or AM.

(2) Manual tuning button

9403CD105

① To manually tune to a radio station, simply turn encoder TUNE (2) left or right to increase or decrease the radio frequency.

(3) Auto tuning button

9403CD106

9403CD107

① To automatically select a radio station, simply press Seek up or Track down button.

(4) Station preset button

9403CD108

① In radio mode, pressing buttons (6) to (11) will recall the radio stations that are memorized. To store desired stations into any of the 6 preset memories, in either the AM or FM bands, use the following procedure :

a. Select the desired station.
b. Press and hold one of the preset buttons for more than 2 seconds to store the current station into preset memory. Six stations can be memorized on each of FM1, FM2, and AM.

(5) Preset scan (PS) / Best station memory (BSM) button

① Press BSM button (12) momentarily to scan the 6 preset stations stored in the selected band. When you hear your desired station, press it again to listen to it.
Press BSM button (12) for longer than 2 seconds to activate the Best Station Memory feature which will automatically scan and enter each station into memory.

※ **If you have already set the preset memories to your favorite stations, activating the BSM tuning feature will erase those stations and enter into the new ones. This BSM feature is most useful when travelling in a new area where you are not familiar with the local stations.**

■USB PLAYER

(1) USB playback

9403CD110

① The unit was equipped with a front USB jack and also a rear USB Jack.
With a USB device plugged in the front USB jack, it will be detected as front USB mode. And with a USB device plugged in the rear USB jack, it will be detected as rear USB. To get to a USB mode, press MODE (3) button momentarily or insert the USB device in front or rear USB jack.

※ **If there are no mp3 or wma files in USB device, it will revert to the previous mode after displaying NO FILE.**

(2) Track Up / Down button

9403CD106

① Press SEEK up (13) or TRACK down (14) to select the next or previous track. Press and hold the buttons to advance the track rapidly in the forward or backward direction.

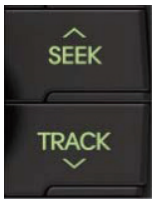

9403CD107

(3) MP3 directory / File searching

9403CD111

① Button (2) is used to select a particular directory and file in the device. Turn button (2) right or left to display the available directories. Press button (2) momentarily when the desired directory is displayed, then turn button (2) right or left again to display the tracks in that directory. Press button (2) to begin playback when the desired file is displayed.

(4) Directory Up / Down button

9403CD112

① During MP3/WMA playback, simply press DIR- button (10) to select the previous directory (if available in the device); simply press DIR+ button (11) to select the next directory (if available in the device).

※ **If the USB device does not contain directories, it would play MP3/WMA tracks at 10- file when you press DIR- button (10), and play MP3/WMA tracks at 10+ file when you press DIR+ (11) button.**

(5) Track Scan Play (SCAN) button

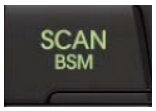

9403CD113

- SCAN playback : Simply press SCAN (12) button to play the first 10 seconds of each track.
- SCAN folder : Press and hold SCAN button for longer than 2 seconds to scan play the tracks in current folder.
- SCAN off : Simply press it again to cancel SCAN feature.

(6) Track Repeat Play (RPT) button

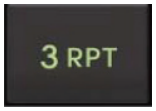

9403CD114

- REPEAT playback : Simply press RPT (8) button to play current track repeatedly.
- REPEAT folder : Press and hold RPT for longer than 2 seconds to repeat play the tracks in current folder.
- REPEAT off : Simply press it again to cancel REPEAT feature.

(7) Track Random Play (RDM) button

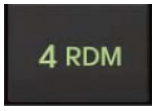

9403CD115

- RANDOM playback : Simply press RDM (9) button to play the tracks in the device in a random sequence.
- RANDOM folder : Press and hold RDM button for longer than 2 seconds to randomy play the tracks in the current folder.
- RANDOM off : Simply press it again to cancel RANDOM feature.

(8) ID3 v2 (DISP)

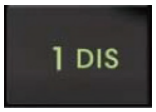

9403CD116

① While a MP3 file is playing, press DISP button (6) to display ID3 information. Repeat push DISP button (6) to show directory name / file name and album name / performer / title.

※ If the MP3 disc does not have any ID3 information, it will show NO ID3.

* USB Information and Notice

a. Playback FILE SYSTEM and condition allowance.
   - FAT, FAT12, FAT16 and FAT32 in the file system.
   - V1.1, V2.2 and V2.3 in the TAG (ID3) version.

b. Display up to 32 characters in the LCD display.

c. No support any of MULTI-CARD Reader.

d. No high speed playback but only playing with normal full speed.

※ DRM files in the USB may cause malfunction to playback in the radio unit.

※ In temperatures below -10℃ (14°F), the audio unit with USB hook up may be affected and not play well.

■AUX OPERATION

It is possible to connect your portable media player to the audio system for playback of the audio tracks via the cab speakers.

To get the best results when connecting the portable media to the audio system, follow these steps :

- Use a 3.5 mm stereo plug cable to connect the media player headphone socket at each end as follows.
- Adjust the portable media player to approximately 3/4 volume and start playback.
- Press the MODE button (3) on the audio unit to change into AUX mode.
- The volume and tone can now be adjusted on the audio unit to the desired level.

※ **The audio quality of your media player and the audio tracks on it may not be of the same sound quality as the audio system is CD Player.**

※ **If the sound of the media player is too low compared with the radio or CD, increase the volume of the player.**

※ **If the sound of the media player is too loud and/or distorted, decrease the volume of the player.**

※ **When in AUX mode, only the Volume, Bass, Treble, EQ and Mode functions of the audio unit can be used.**

■BLUETOOTH (if equipped)

(1) Using a bluetooth wireless connection

① Your audio unit supports bluetooth wireless technology. You can set up a wireless link with bluetooth cellular phone.

② Continue to pair the cellular phone with the audio unit. Within a few moments the two should be able to connect.

※ Since this audio unit is on standby to connect with your cellular phone via bluetooth wireless technology, using this audio unit without running the engine can result in battery drainage.

※ This audio units phone call reception is on standby when ignition switch is set to ACC OFF or ON.

※ The line-of-sight distance between this audio unit and your cellular phone must be 10 meters or less for sending and receiving voice and data via bluetooth wireless technology. However the transmission distance may become shorter than the estimated distance depending on the environment where it is being used.

※ Digital Noise & Echo suppression system provides the best sound clarity with little or no distortion (Echo & side tone will happen depending on cellular phone or service network).

※ To ensure the quality of calling, you should select a proper bluetooth VR level. This audio unit is already equipped with the best bluetooth VR level.

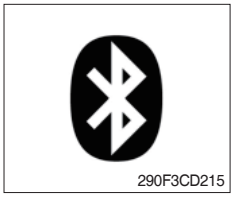

a. Bluetooth icon

It will blink while establishing the bluetooth pairing.

It will light up after a bluetooth device connected.

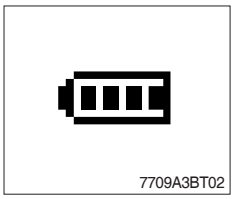

b. Battery icon

It indicates the battery status of the connected bluetooth device.

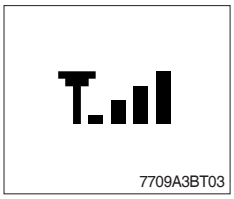

c. Single strength icon

It indicates the signal strength of the connected bluetooth device.

(2) Pairing in hands free modes

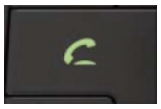

9403CD117

① Press and hold CALL button (4) for 2 seconds until you hear beep sound, then PAIR STR will appear on the display.

② For the next procedure, go to cellular phone pairing mode.

③ If it is in pairing status with audio unit and cellular phone, PAIRING will show on the display.

④ If you want to exit pairing mode, press CALL END button (5) briefly while pairing, then it will show PAIR CLR on the display.

⑤ Bluetooth Icon and PAIR OK appear on the display when pairing is successful.

(3) Cellular phone pairing mode

① Browse your cellular phone menu and find the connectivity or bluetooth connection section.

② Select search for a new handsfree device function and allow the phone to find the mobile.

③ HYUNDAI should appear on your cellular phone screen.

④ Press connect menu among the handsfree option on your cellular phone.

⑤ The cellular phone should prompt for a pin code. Insert the pin code 1234.

⑥ The cellular phone should confirm that it has established a new paired connection.

⑦ Close the menu. The pairing is now completed. It appears PAIR FAIL on the display for 3 seconds.

※ Each cellular phone type has distinct phone menu so you may need to refer to your manufactures instruction for the correct procedure on how to connect a new bluetooth device.
※ Please retry the pairing instruction if HYUNDAI does not appear on the cellular phone screen.
※ Please select authorized, if there is authorized menu in the menu of bluetooth connection in your cellular phone.
※ Once the bluetooth pairing is completed between your cellular phone and this audio unit, both units will be automatically recognized on its paring like when you turn on the key in your car even though the audio unit is turned off.
※ This audio unit can store up to 6 phones pairings. If the memory is full, the first stored paired phone will be deleted.
※ The connecting priority will be given to the last connected cellular phone.
※ If you want to change the connecting priority, try to connect this audio unit from the cellular phone you want.

(4) Bluetooth connection and disconnection

① When established bluetooth connection is made between this audio unit and the cellular phone, bluetooth icon on the display appears and then the display shows HF/AV CONN when handsfree & AV profile is connected.

9403CD118

② To disconnect bluetooth link
Press and hold CALL END button (5) for 2 seconds, it shows DIS CON and bluetooth Icon disappears on the display.

9403CD117

③ To connect bluetooth link
Press CALL button (4) briefly, it blinks bluetooth Icon on the display while bluetooth is being connected. If the connection is completed, bluetooth Icon displays on the display.

※ When your cellular phone battery is at low charge, the bluetooth connection may occasionally be lost. To maintain good connectivity ensure that your phone battery is adequately charged.

※ In case of failure of bluetooth pairing :
- **Delete item in paired list on your phone.**
- **Reset both phone by power off/on and the audio unit by ACC off/on.**

※ Connecting priority of handsfree profile is higher than headset profile.

※ The headset mode does not support caller ID, reject call and call Transfer.

(5) Using the audio unit as a handsfree device

① When the audio unit is ringing, it shows CALL and follows with the phone number ********** on the display.

9403CD117/8

② To accept call
Press CALL button (4), ANSWER CALL followed by TALKING will show in the display.

③ To end call
To end call, press CALL END button (5), REJECT appears on the display.

※ If reject call is activated in your phone, then your cellular phone does not support reject call function.

(6) Audio transfer between the audio unit and phone

The audio transfer function is for switching the call from the audio unit to the cellular phone for private conversation.

① Press CALL button (4) briefly during conversation, it appears CALL TRANS on the display. To switch back to the audio unit, press button (4) briefly during private conversation, then it appears CALL TRANS on the display again.

※ **This function will be a cause of disconnection of bluetooth link in some nokia phones, but do not worry, just press button (4) during private conversation, then switch back to the audio unit automatically.**

※ **The quality of calling between cellular phone and audio unit is better than calling between one audio unit and another one.**

(7) Last call number dialing

① Press CALL button (4) briefly, it appears CALL TO on the display, then simply press CALL button once again, it would make the last call with phone number displayed on LCD.
If Reject call is activated in your phone, then your cellular phone does not support Reject Call function.

※ **If you are using SAMSUNG phone, then you may need to press send button once more. With the first press of button it should show contact list in your phone, then if you press again you should be ready to make the last call.**

(8) To make a call by cellular phone

The audio transfer function is for switching the call from the audio unit to the cellular phone for private conversation.

① The audio unit will be activated automatically when you make a call with cellular phone.
② When you make a call processing by cellular phone, it shows CALLING on the display.
③ When you receive a call, the phone number ******** appears on the display.

(9) Using the audio unit as bluetooth music

The audio unit supports A2DP (Audio Advanced Distribution Profile) and AVRCP (Audio Video Remote Control Profile), and both profiles are available to listen music at the audio unit via cellular phone which is supporting the two profiles above.

① To play music, search the menu on your cellular phone as below :
i.e : Menu➛ File manager➛ Music➛ Option➛ Play via bluetooth.
It appears BT MP3 on the display.

② During BT MP3 playing, you could select the previous or next track by pressing SEEK up or TRACK down button on audio unit or operate via your cellular phone.

③ To stop music, press button (5) briefly and it will automatically switch into the previous mode.

④ To resume music playing, press the play button on your cellular phone.

※ This function may be different depending on cellular phone. Please follow the cellular phone menu. Some types of phones need to pair once more for bluetooth MP3 connection.

※ This function will be caused to disconnect A2DP, AVRCP depends on cellular phone.

※ Information about songs (e.g.: the elapsed playing time, song title, song index, etc.) cannot be displayed on this audio unit.

■RESET AND PRECAUTIONS

(1) Reset function

Interfering noise or abnormal compressed files in the MP3 disc or USB instrument may cause intermittent operation (or unit frozen/locking up). It is strongly recommended to use appropriate USB storage to not cause any malfunction to the audio unit. In the unlikely event that the player fails to operate correctly, try to reset unit by any of following two methods.

① press and hold

simultaneously for about 5 seconds. (without Bluetooth)

② Press and hold

simultaneously for about 5 seconds. (with Bluetooth)

※ **Take out the fuse for the audio system in the truck once and then plug it back in.**

※ **It will be necessary to re-enter the radio preset memories as these will have been erased when the microprocessor was reset.**
After resetting the player, ensure all functions are operating correctly.

(2) Precautions

When the inside of the cab is very cold and the player is used shortly after switching on the heater, moisture may form on the disc or the optical parts of the player and proper playback may not be possible.
If moisture forms on the optical parts of the player, do not use the player for about one hour. The condensation will disappear naturally allowing normal operation.

① Operation voltage : 9~32 volts DC, negative
② Output power : 40 watts maximum (20 watts x 2 channels)
③ Tuning range

Area	Band	Frequency range	Step
USA	FM	87.5~107.9 MHZ	200K
	AM	530~1710 KHZ	10K
EUROPE	FM	87.5~108.0 MHZ	50K
	AM	522~1620 KHZ	9K
ASIA	FM	87.5~108.0 MHZ	100K
	AM	531~1602 KHZ	9K
LATIN	FM	87.5~107.9 MHZ	100K
	AM	530~1710 KHZ	10K

● AREA Selection :
- To select an area, press and hold related buttons at FM1 band for about 3 seconds.
- USA Area: Press and hold mode + 1DIS buttons for 3 seconds
- EUROPE Area: Press and hold mode + 2 buttons for 3 seconds
- ASIA Area: Press and hold mode + 3RPT buttons for 3 seconds
- LATIN Area: Press and hold mode + 4RDM buttons for 3 seconds.

④ USB version : USB 1.1
⑤ Bluetooth version : V2.1
⑥ Bluetooth supported profile :
- A2DP : Advanced Audio Distribution Profile
- AVRCP : Audio/Video Remote Control Profile
- HFP : Hands-Free Profile

8) CAMERA MONITOR (option)

960A3CD65

(1) Summary of key actions

No.	Button	Description	Single Cam mode	Function menu - Single Cam
1		POWER	- Beep stop*	- Beep stop* - Menu escape (save & exit)
2		SELECT	Parking guide line On / Off	- 0 : Menu select - 1 : Adjust menu escape
3		**MENU**	- 0 : Menu enter - 1 : Parking guide line adjust (long key/2 sec)	Menu next page
4		**UP**	- S*: Previous view - L*: Adjust to the volumn set in the menu	- Menu Up - Menu Adjust Up
5		DOWN	Next view	- Menu Down - Menu Adjust down

· Beep stop : Operates with Power button during beep (MOD) operation and has the highest priority.
· Beep stop off : Monitor OFF → ON or UP key (L)
· When alarm beep occurs, key beep mute.
· S : Short key
· L : Long key

(2) Operation scenario (Single camera mode)

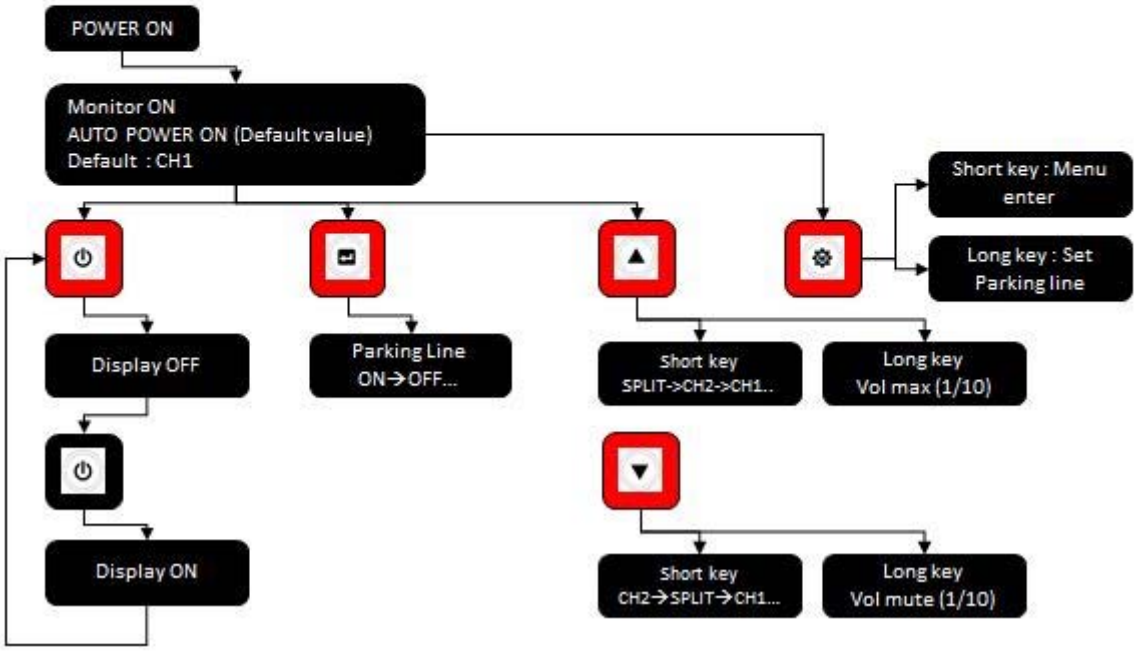

160D9V3CD100

(3) Function menu tree (Single cam mode)

SHORT KEY					
NO	MENU	Pop-up menu	Background video	SETTING VALUE	비고
1	SCREEN COLOR SETTING		Previous view	BRIGHT : 0~60 / 1STEP	DEFAULT : 20
				CONTRAST : 0~60 / 1STEP	DEFAULT : 33
				COLOR : 0~60 / 1STEP	DEFAULT : 30
				SHARPNESS : 0~60 / 1STEP	DEFAULT : 30
				TINT : 0~60 / 1STEP	DEFAULT : 30
2	CAMERA 1 SETTING	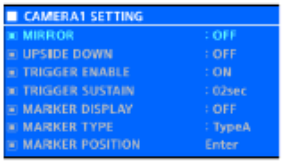	CAMERA 1	MIRROR : ON/OFF	
				UPSIDE DOWN : ON/OFF	
				TRIGER ENABLE : ON/OFF	
				TRIGER SUSTAIN : 1~20sec / 1sec	
				MARKER DISPLAY : ALWAYS/TRIGER/OFF	
				MARKER TYPE : TYPE A / TYPE B	
				MARKER POSITION : ENTER	MARKR WIDTH / HIGHT ADJUST
3	CAMERA 2 SETTING	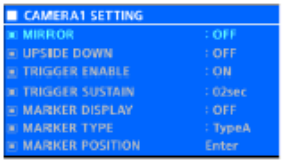	CAMERA 2	MIRROR : ON/OFF	
				UPSIDE DOWN : ON/OFF	
				TRIGER ENABLE : ON/OFF	
				TRIGER SUSTAIN : 1~20sec / 1sec	
				MARKER DISPLAY : ALWAYS/TRIGER/OFF	
				MARKER TYPE : TYPE A / TYPE B	
				MARKER POSITION : ENTER	MARKR WIDTH / HIGHT ADJUST
4	SPLIT 1 SETTING	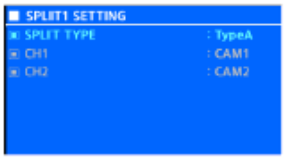	SPLIT VIEW	SPLIT TYPE : TYPE A / TYPE B	
				CH1 : CAMERA1 / CAMERA 2	
				CH2 : CAMERA1 / CAMERA 2	
5	SYSTEM CONFIG		SPLIT VIEW	AUTO POWER : AUTO / ON / OFF	
				AUTO DIMMER : ON / OFF	
				BEEP VOLUME : 0~10 / 1 STEP	DEFAULT : 5
				LANGUAGE : 한국어 / ENGLISH	DEFAULT : ENGLISH
				FACTORY RESET : Ver x.xx / x.xx	

160D9V3CD101

(4) Parking guide line adjust

MENU BUTTON LONG KEY ENTER

CAMERA 1, 2 SETTING [Marker Position] SELECT and ENTER

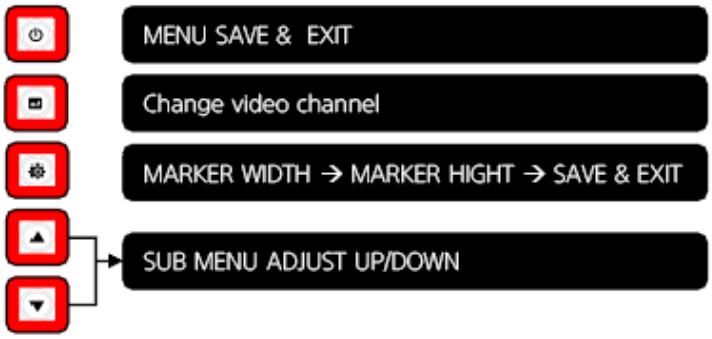

TYPE A	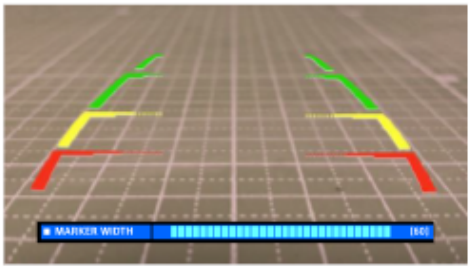	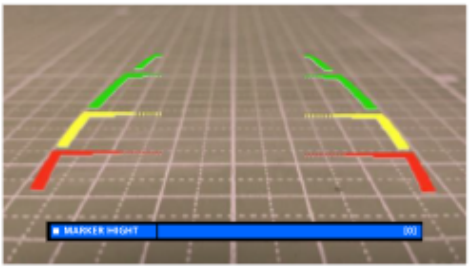
TYPE B		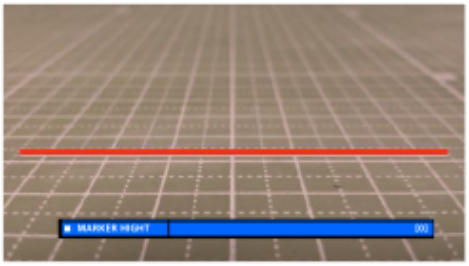

1. To set the parking line, [MARKER DISPLAY: ALWAYS or TRIGGER] must be set in Camera 1 or Camera 2 setting.
2. In other modes, the parking line can not be set.
3. [MARKER DISPLAY : OFF]
   1) The parking line positioning menu should not be selected.
   2) Do not enter LONG KEY with the menu button.

160D9V3CD102

(5) How to set function menu

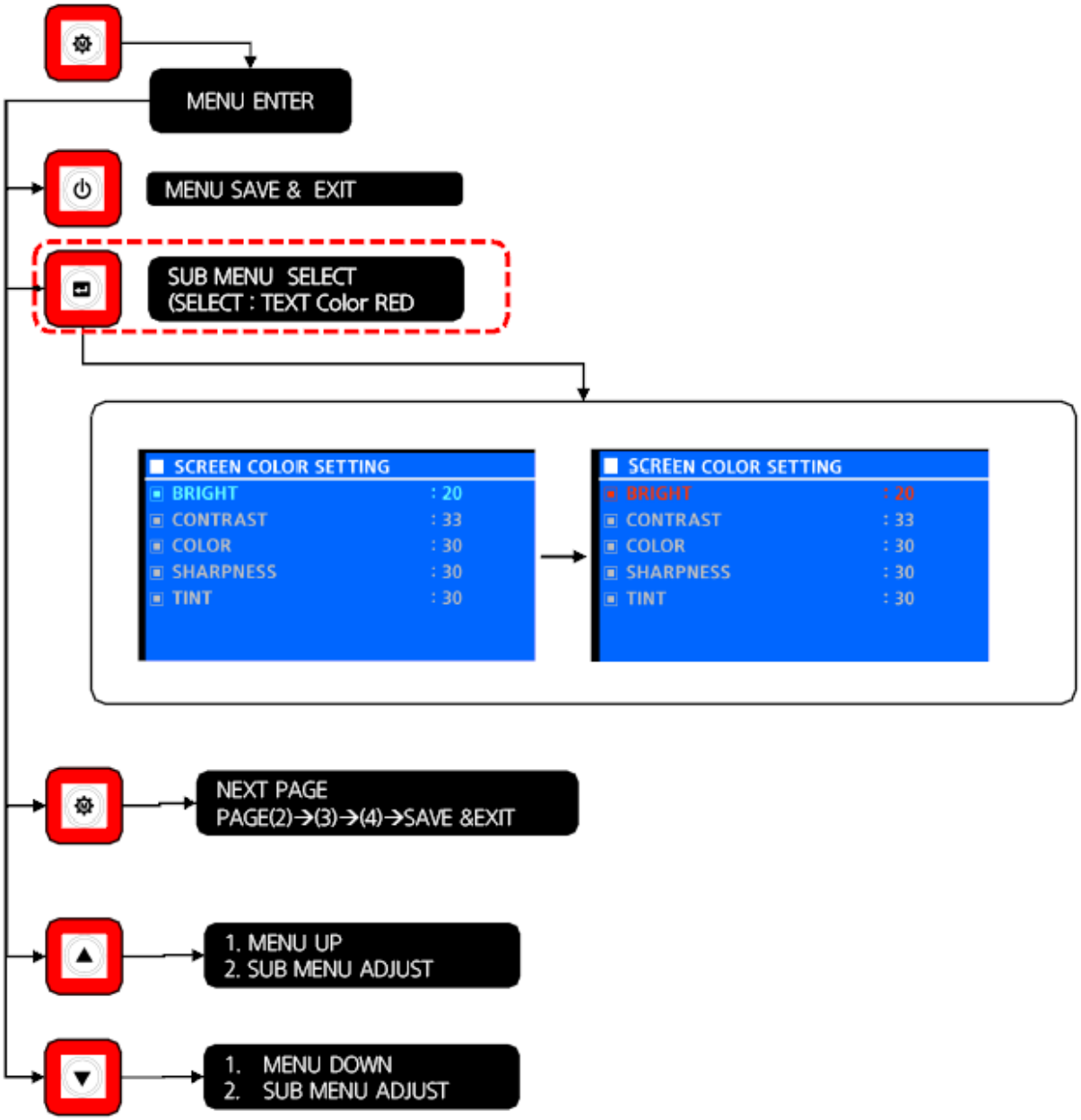

160D9V3CD103

(6) Composition of menu screen

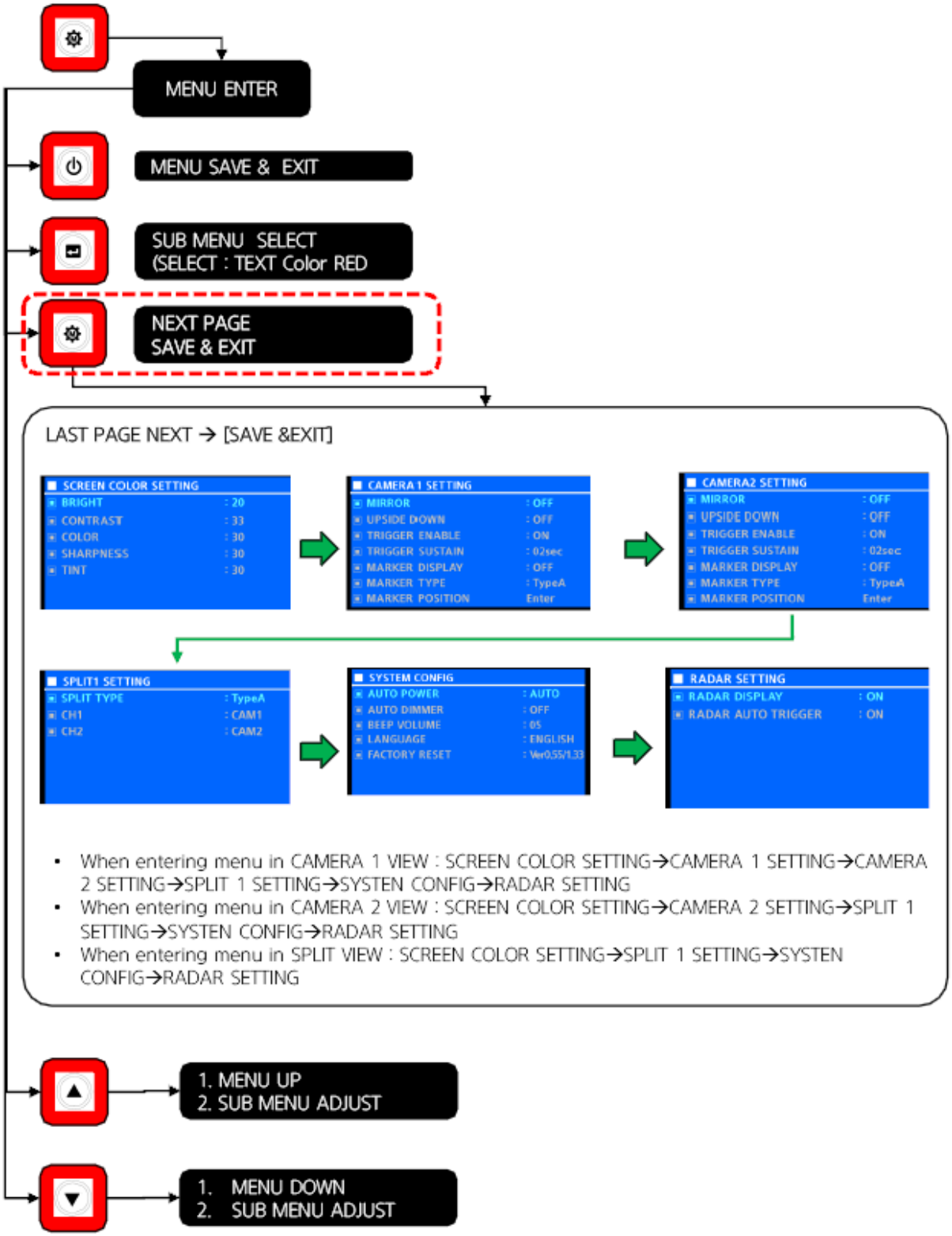

160D9V3CD104

(7) Value adjustment

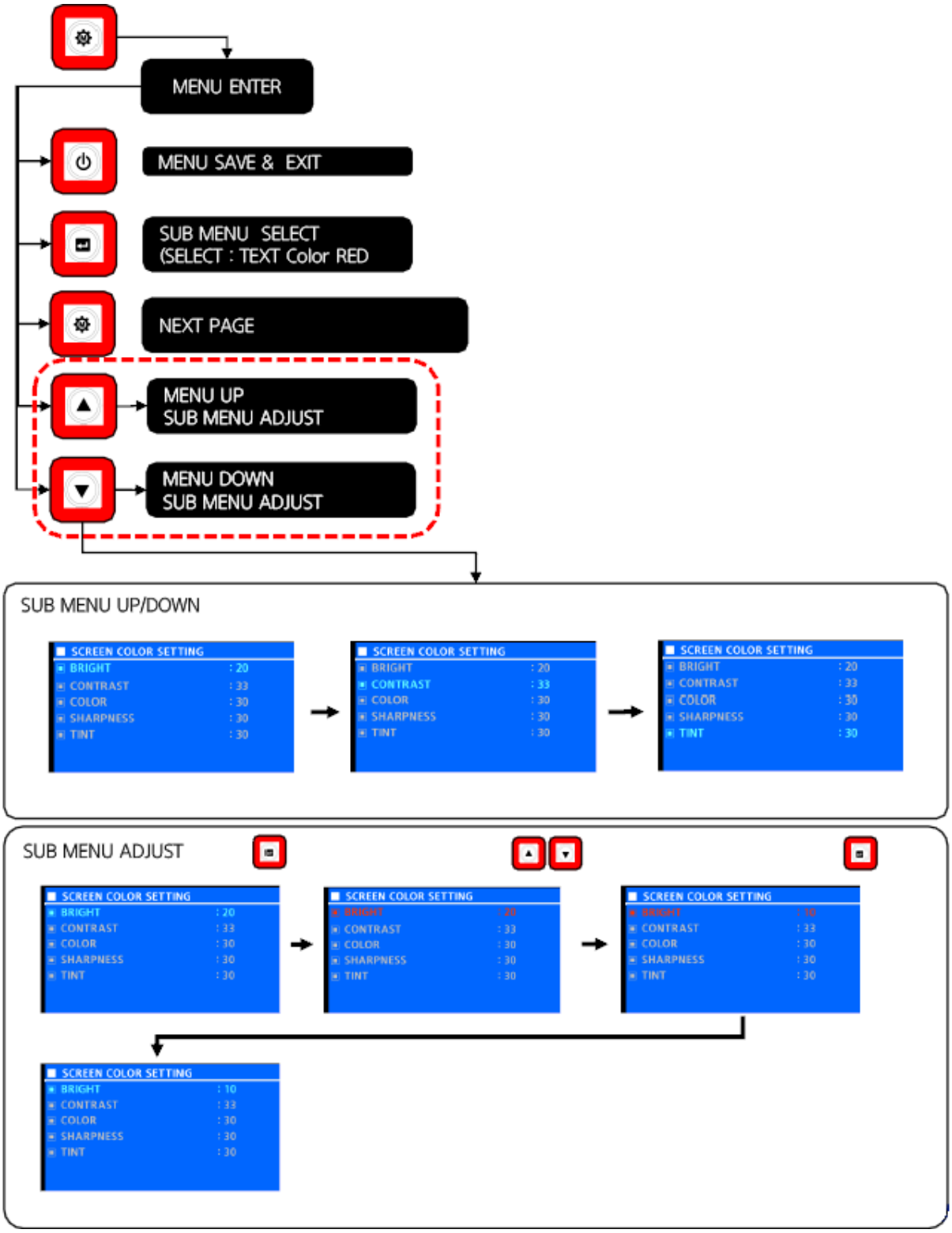

160D9V3CD105

9) HI-MATE (BASIC)

(1) How to connect

① Web : https://himate.hyundai-ce.com

92FT-00426

② App : iOS App Store / Google Play Store Search “HiMATE

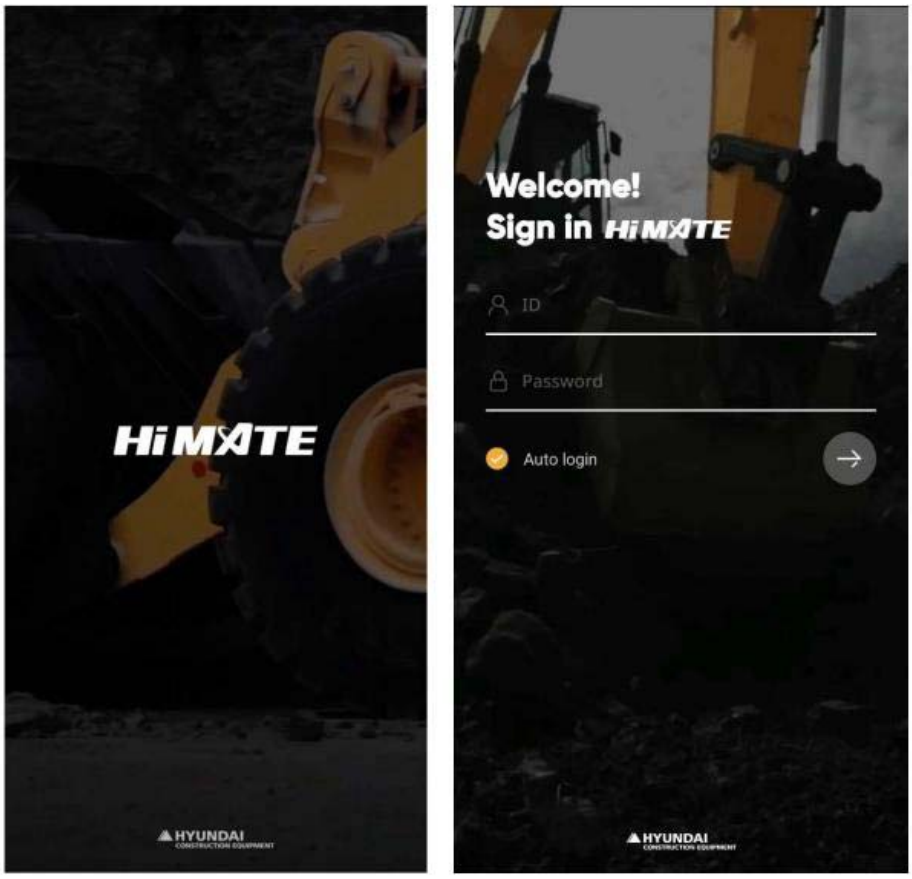

160D9V3HM02

(2) How to search

① You can search, see the result and get additional valuable information at a glance.

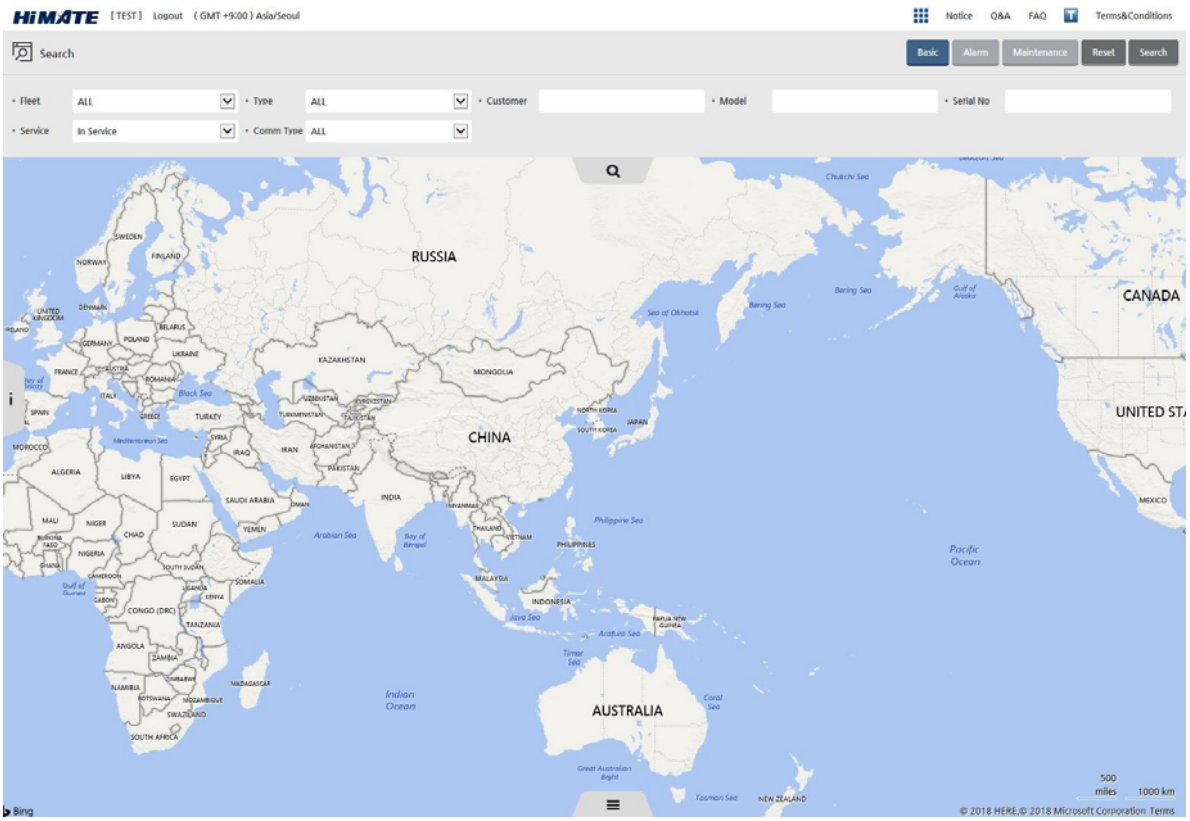

160D9V3HM03

② You can search, see the result and get additional valuable information at a glance.

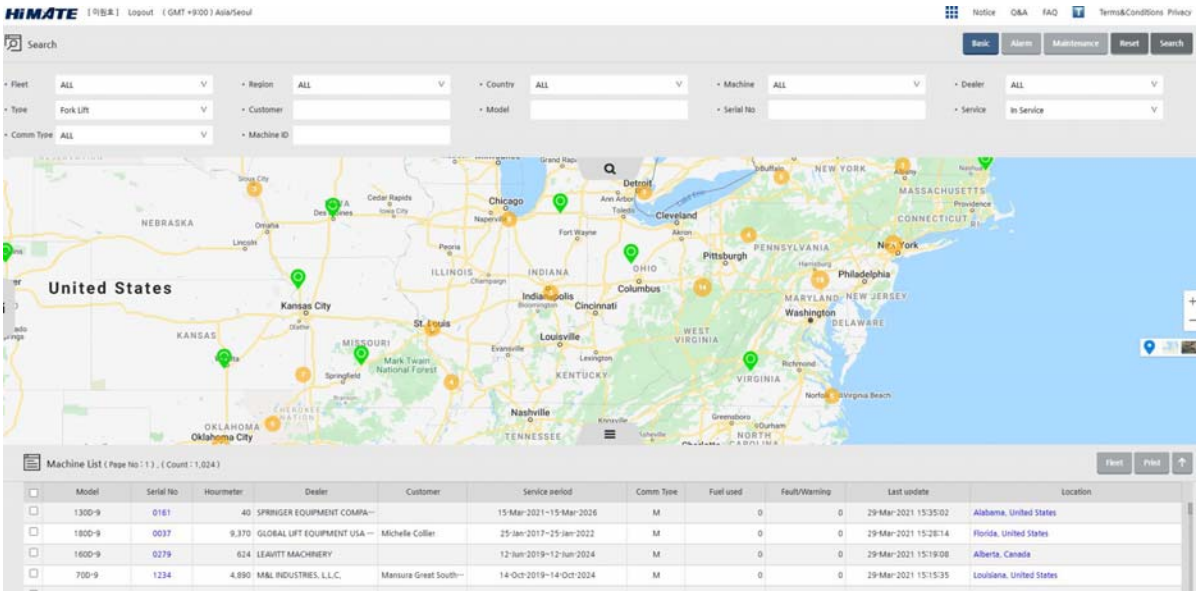

160D9V3HM04

③ After you click the search button, the location (map) and list of the devices that appear as search results appear.
The equipment is expressed in green, sky blue, purple, depending on the type.

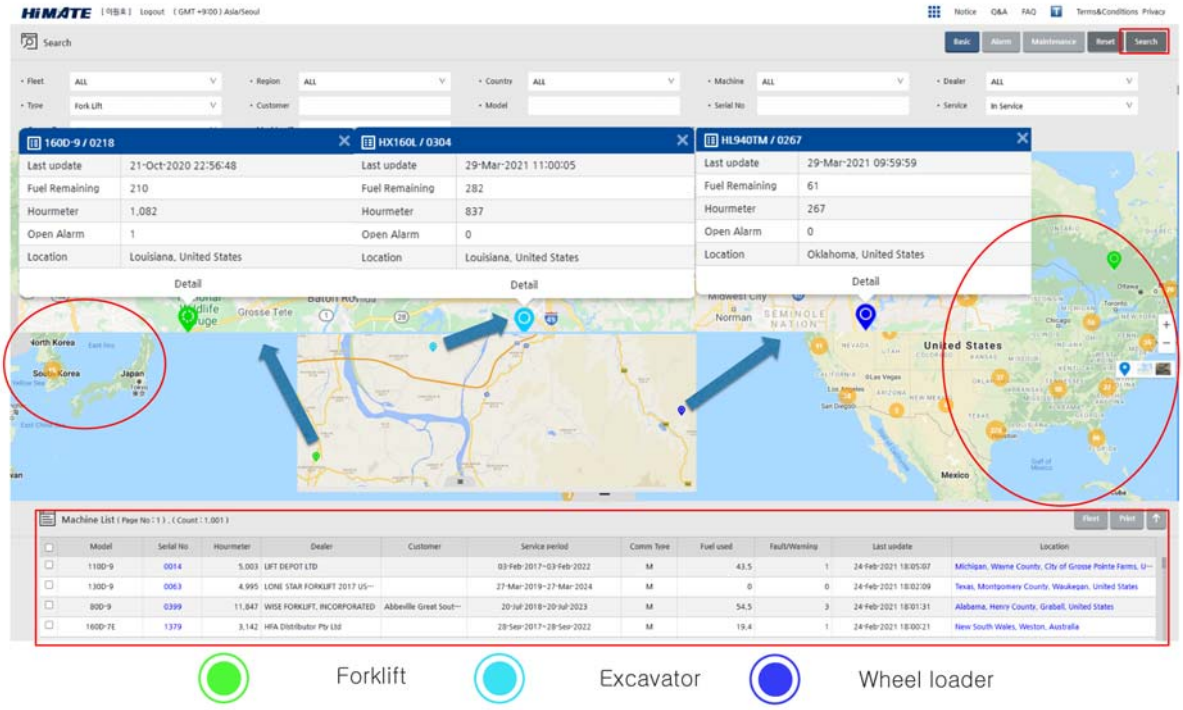

160D9V3HM05

④ The icon of the map refers to different types of equipment by color.

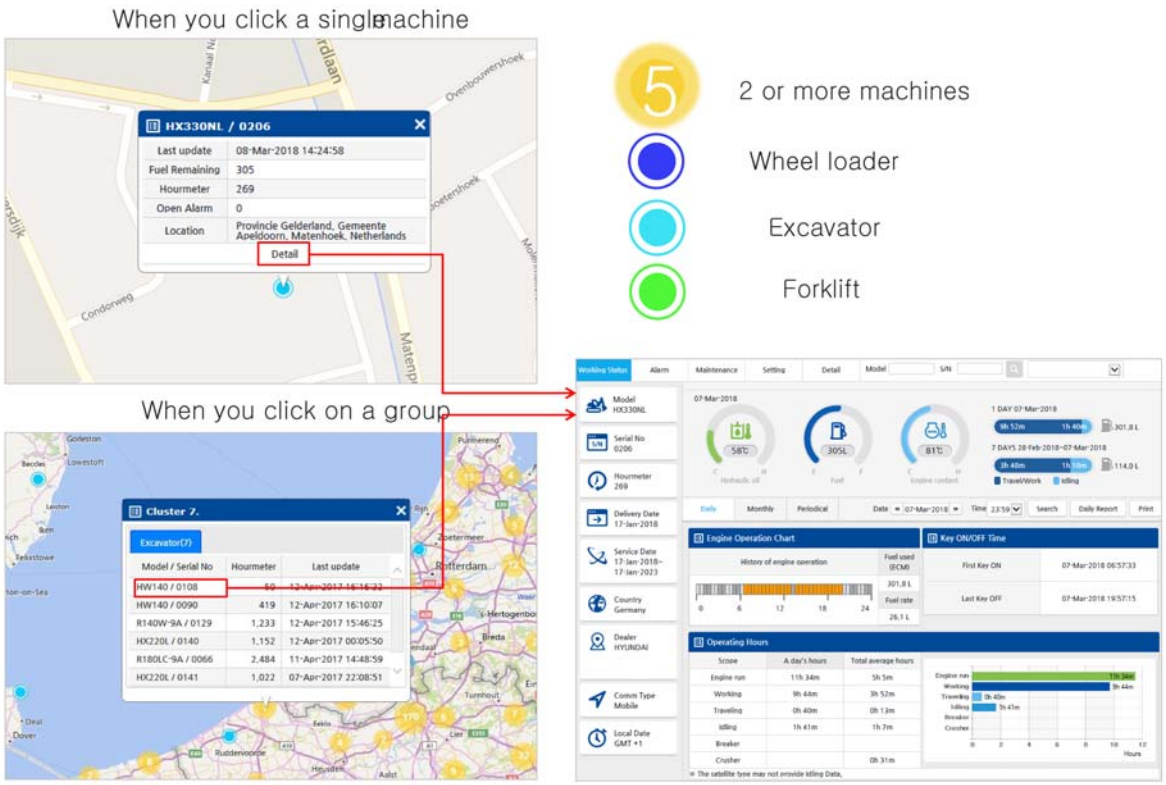

160D9V3HM06

(3) How to search machine list

When you click S/N in the list, the details of appliance will be displayed, and when you click the location, the map screen moves to the location of the equipment.

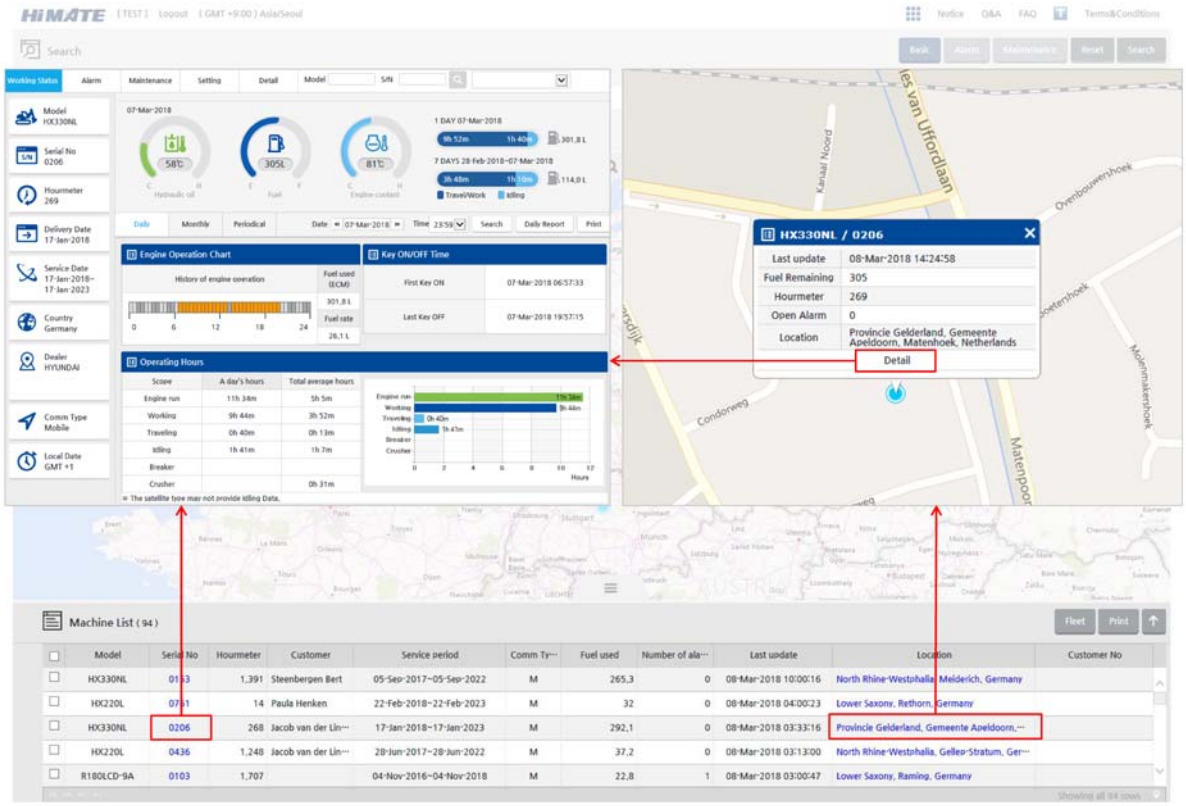

160D9V3HM07

(4) How to create fleet

You can search, see the result and get additional valuable information at a glance.

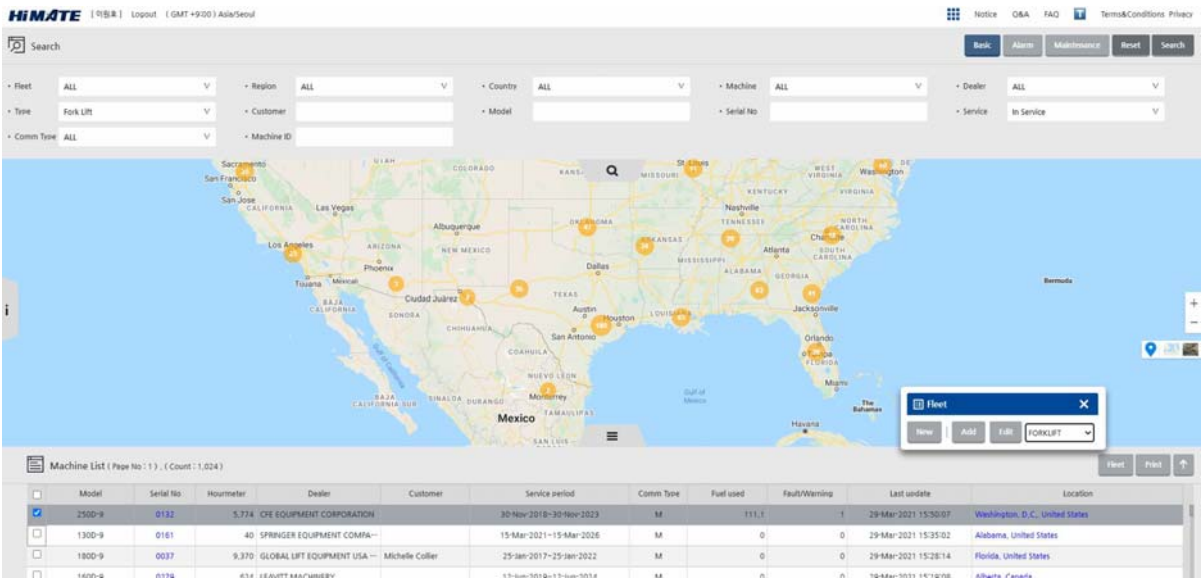

160D9V3HM08

(5) Application list

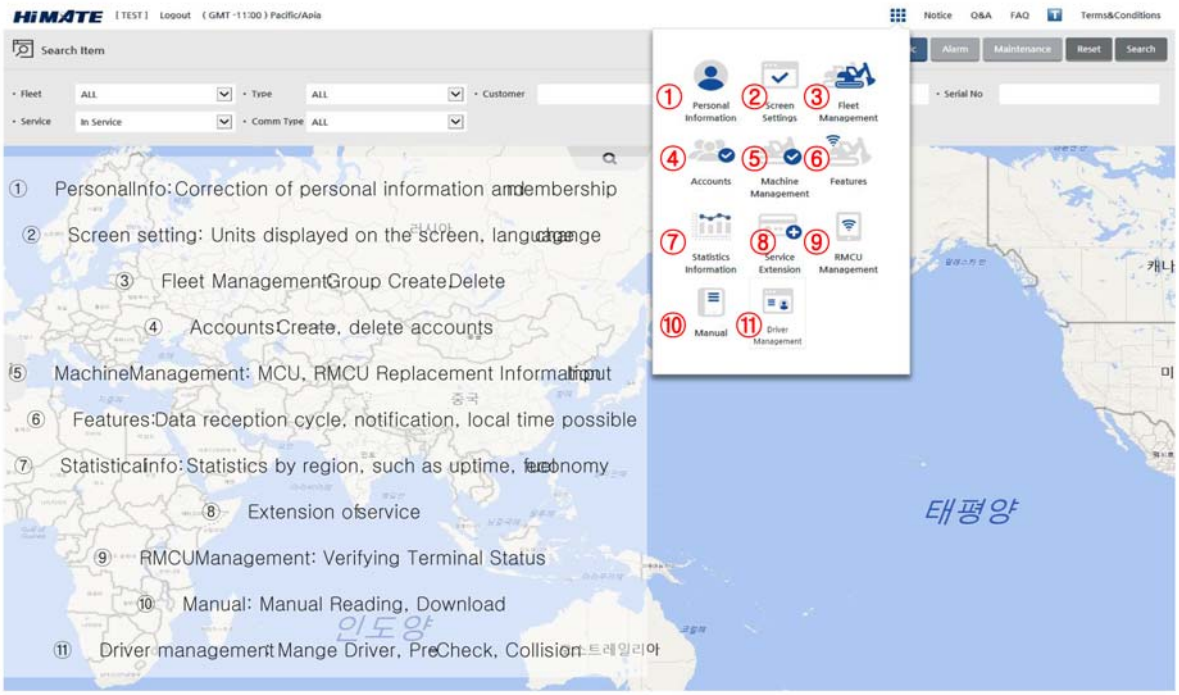

160D9V3HM09

(6) Extension of service

Free subscription for New Equipment with RMS option

HCE offers free Hi MATE subscription for equipment purchased with RMS as an option or a standard. The period may differ by communication type and region. If you replace or move the RMCU to another equipment, free subscription is not offered.

Mobile	Satellite	Dual
5 years	2 years	2 years

Forklift is only available for Mobile

Hi MATE subscription starts when one of 4 requirements is met.

How to Extend Hi MATE Subscription

To continue Hi MATE service after termination or to start it for retrofitted RMS, use a service extension card.

Period	Mobile	Satellite	Dual
1 month	21Q8-32360	21Q8-32270	[illegible]
6 months	21Q8-32350	21Q8-32260	[illegible]
1 year	21Q8-32340	21Q8-32250	[illegible]
3 years	21Q8-32330	21Q8-32230	-

160D9V3HM10

(7) Machine details (engine type)

In the working status, you can find more information, including operation information, alarm, and etc.

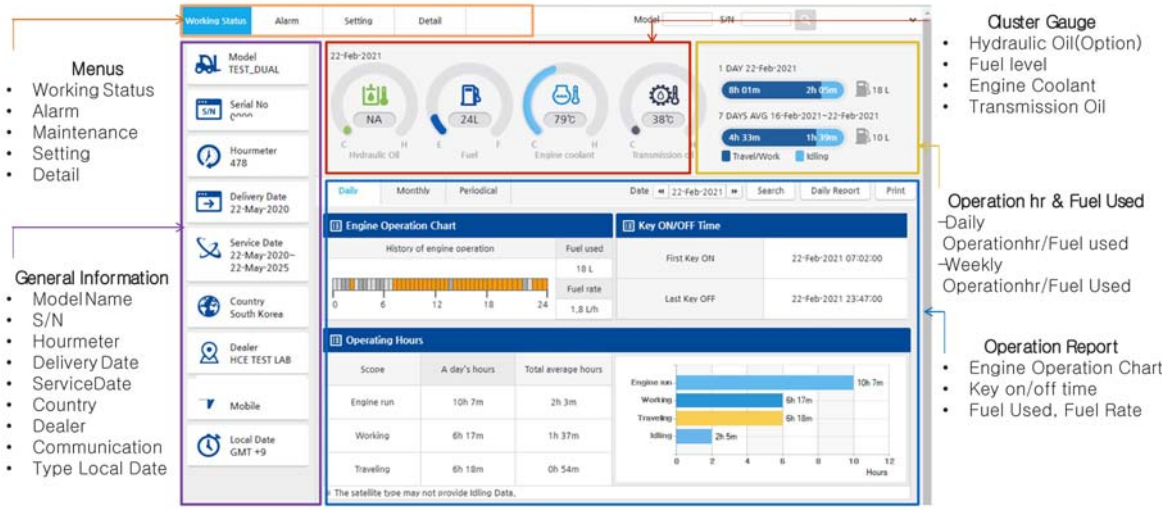

List	Contents	Remark
Fuel	Current Fuel Tank	
Fuel Used	Cumulative fuel usage(1day)	
Hydraulic Oil	Measuring Oil Temperature	It measure when selected PA01
Engine Coolant	Measuring Oil Temperature	
Transmission Oil	Measuring Oil Temperature	
Engine Run	When engine run	
Working	When measuring above 100kg	
Traveling	When speed above 1km/h	
Idling	When two situations are not(Working, Traveling)	

If there is no Load weight sensor
Working time, Weight measurement function can not be used

If you want to function FEH01 or FEH03 must be selected
(weight measurement screen is on 8 page)

160D9V3HM11

(8) Machine details (electric type)

In the working status, you can find more information, including operation information, alarm, and etc.

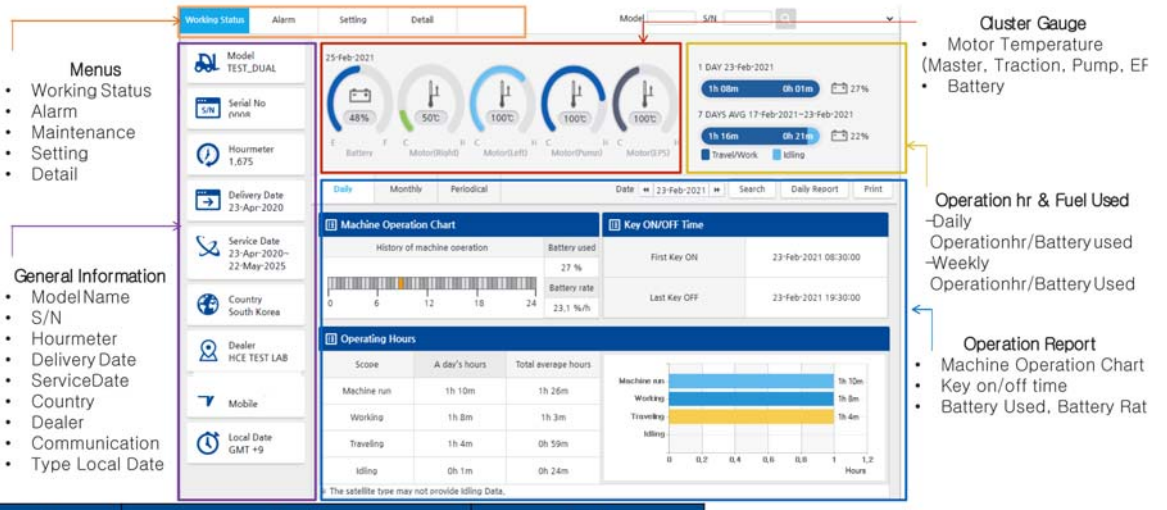

List	Contents	Remark
Battery	Current Battery(%)	
Battery Used	Cumulative Battery usage(1day)	
Motor(Right)	Measuring Motor Temperature	Master, Traction, Right Master
Motor(Left)	Measuring Motor Temperature	If no motor, show N.A(NOT AVAILABLE)
Pump	Measuring Motor Temperature	
EPS	Measuring Motor Temperature	If no motor, show N.A(NOT AVAILABLE)
Machine Run	When Key on	
Working	When Pump Motor Running	
Traveling	When Traction Motor Running	
Idling	When two situations are not(Working, Traveling)	

If there is no Load weight sensor
Weight measurement function can not be used

If you want to function FEH01 or FEH03 must be selected
(weight measurement screen is on 8 page)

160D9V3HM12

(9) Load and angle sensor (EH)

9) Load & Angle Sensor(EH)

Option Code	Mean	Type	Detail Mean	Remark
FEH	Load & Angle Sensor	FEH01	Load Sensor	9Ser. All
		FEH03	Load Sensor + Angle Sensor	16~30ton

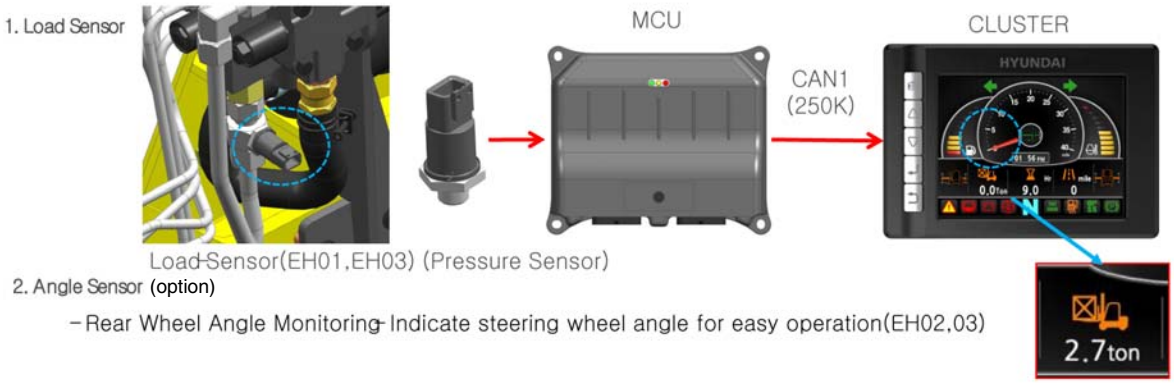

160D9V3HM34A

(10) Machine details (monthly period)

Can check the operating history, temperature distribution, and fuel usage.

160D9V3HM13

(11) Alarm

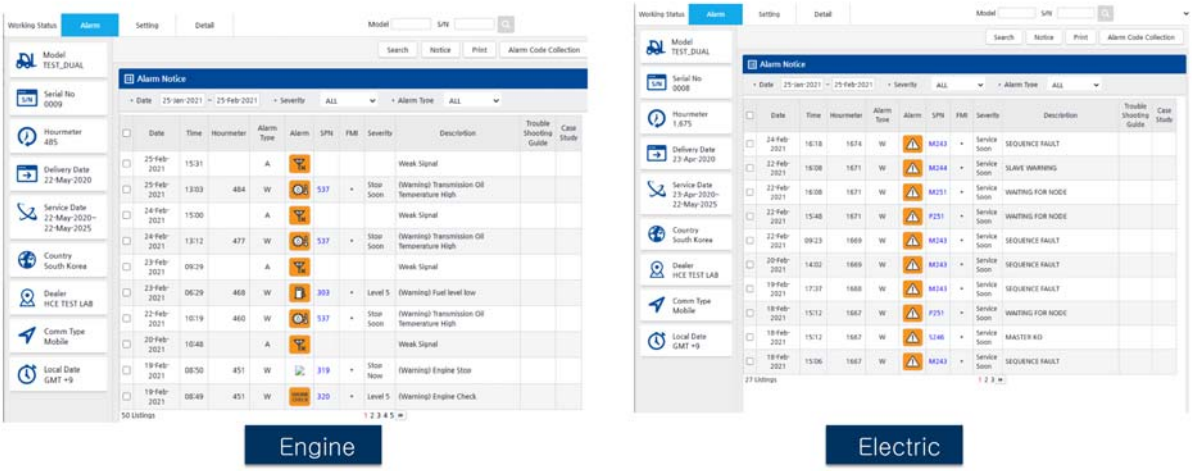

Machine issent to HiMate immediately when an alarm occurs. You can check in real time.

160D9V3HM14

(12) Geo-fencing

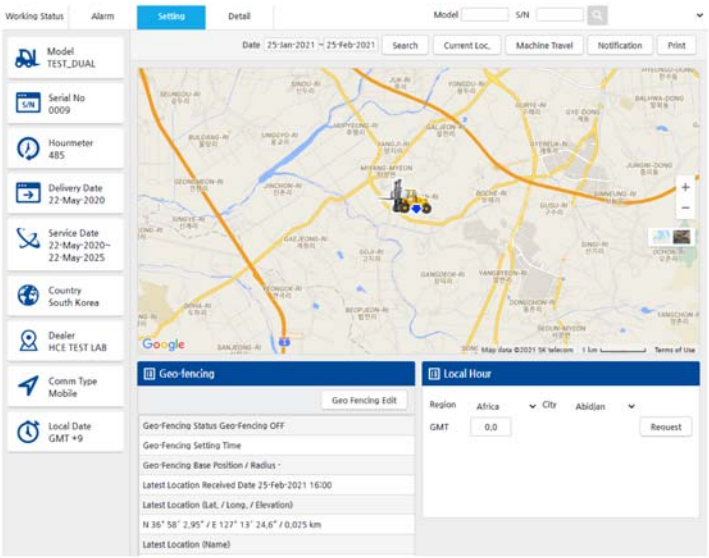

After setting the location range to use to prevent theft from the current position, the alarm occurs when the position is exceeded.(Can be received by E-Mail & SMS)

160D9V3HM15

(13) Alarm

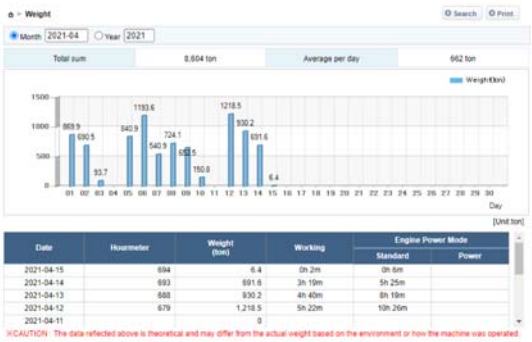

Engine

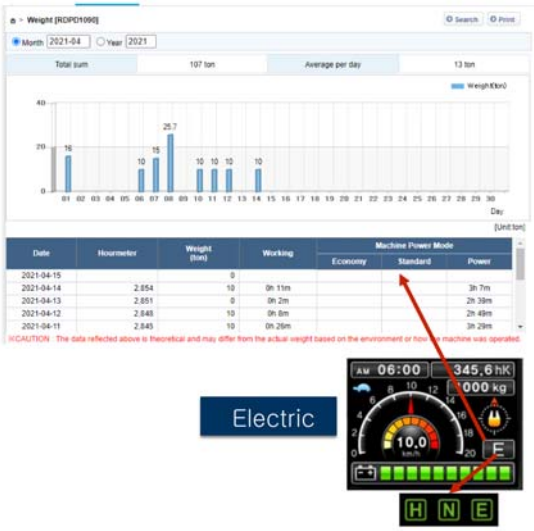

Electric

Weight can be measured up to 99,999ton a day, and workloads are recorded during the day.
Electric: ECONOMY(= E), Standard (N), POWER(= H) mode
Engine: Standard(=Eco), Power(=Standard) mode.

Weight logic: When the weight is more than 100kg, Stacked every second.
When it is less than Weight(ton)= Weight Sum / Count

160D9V3HM16

(14) Hourmeter

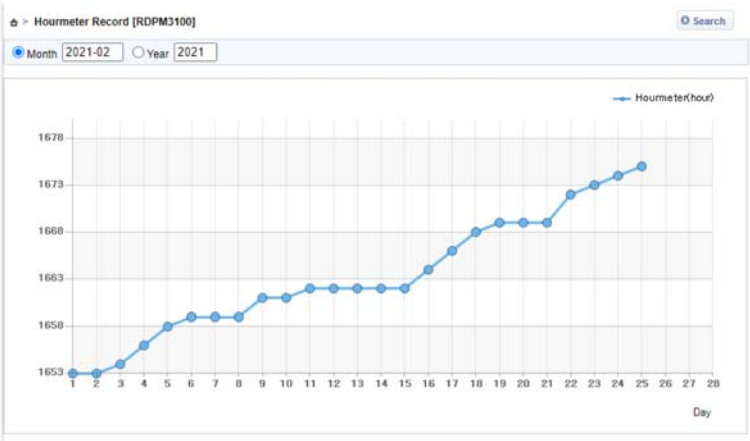

You can check the daytime HOURMETER to verify that it was excessively used in a specific date.

160D9V3HM17

(15) Temperature (available in dealer accounts)

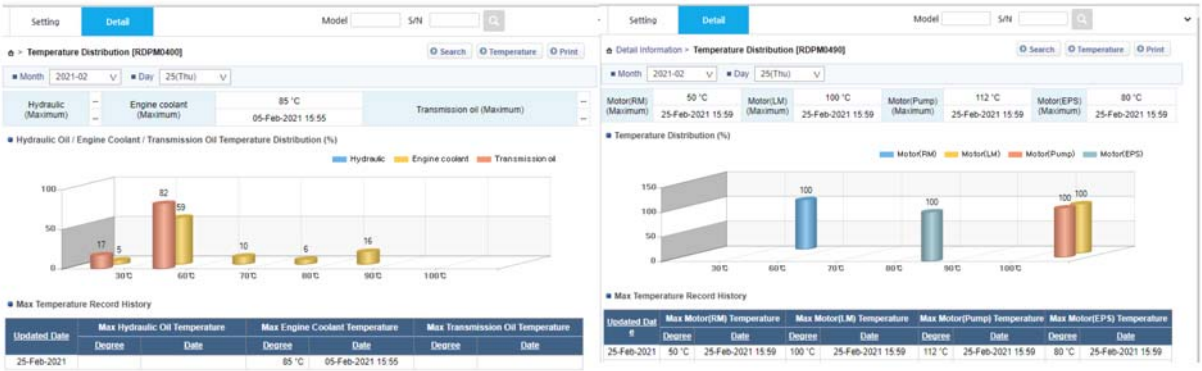

Engine

Electric

The engine type measures the Hydraulic, Engine Coolant, Transmission Oil temperature.
The electric type measures the temperature for each motor.
You can measure the temperature distribution from 30℃ to 100℃ to determine whether the equipment is excessively used or there is a problem.
In addition, it is possible to manage the equipment to make sure that the maximum temperature is recorded.

160D9V3HM18

(16) MCU information (available in dealer accounts)

> MCU Information [RDPM0500]

MCU info Request

MCU Information

Manufacture Date	MCU Program Version	MCU Serial No	Machine Model	Received date
16-Mar-2020	3.6	1903M00451	BT-9(4)	02-Feb-2021 11:55

MCU Change History

No	Replace Date	MCU Serial No	Hourmeter difference		Input	
			Hour	Sec	Name	Date

> MCU Information [RDPM0500]

MCU info Request

MCU Information

Manufacture Date	MCU Program Version	MCU Serial No	Machine Model	Received date
06-Oct-2020	2.6	20J06-013	45D-9E	02-Feb-2021 10:25

MCU Change History

No	Replace Date	MCU Serial No	Hourmeter difference		Input	
			Hour	Sec	Name	Date

You can check the date of manufacture, MCU Program version, serial number, machinemodel name

160D9V3HM19

(17) Running history (available in dealer accounts)

> Engine Running Hours [RDPD0300]

Search | Daily Report | Print

Month 2021-02 | Period 25-Jan-2021 ~ 25-Feb-2021

Date	History of engine operation	Hourmeter	Engine run	Working	Traveling	Inching Hour	Fuel Level
28-Feb-2021							
27-Feb-2021							
26-Feb-2021							
25-Feb-2021		465	4h 53m	2h 57m	3h 0m		77 %
24-Feb-2021		460	5h 42m	3h 52m	3h 41m		51 %
23-Feb-2021		474	6h 10m	4h 0m	3h 54m		39 %
22-Feb-2021		468	10h 7m	6h 17m	6h 18m		8 %
21-Feb-2021							
20-Feb-2021		458	0h 58m	0h 30m	0h 22m		33 %
19-Feb-2021		457	6h 18m	3h 22m	3h 25m		44 %
18-Feb-2021		451	6h 34m	3h 41m	3h 48m		54 %
17-Feb-2021		444	6h 36m	4h 1m	3h 45m		35 %
16-Feb-2021		437	6h 43m	3h 24m	3h 34m		55 %

Engine

> Machine Running Hours [RDPD0390]

Search | Daily Report | Print

Month 2021-02 | Period 25-Jan-2021 ~ 25-Feb-2021

Date	History of machine operation	Hourmeter	Machine run	Actual working	Traveling	Idling	Battery Level
28-Feb-2021							
27-Feb-2021							
26-Feb-2021							
25-Feb-2021		1,675	1h 6m	0h 52m	0h 49m	0h 13m	67 %
24-Feb-2021		1,674	1h 4m	1h 3m	1h 2m		84 %
23-Feb-2021		1,673	1h 10m	1h 8m	1h 4m	0h 1m	96 %
22-Feb-2021		1,672	3h 23m	2h 17m	2h 7m	1h 6m	73 %

Electric

You can see how you used theequipmentby date and you can export it with PRINT (Excel, etc.).

160D9V3HM20

(18) Mobile app

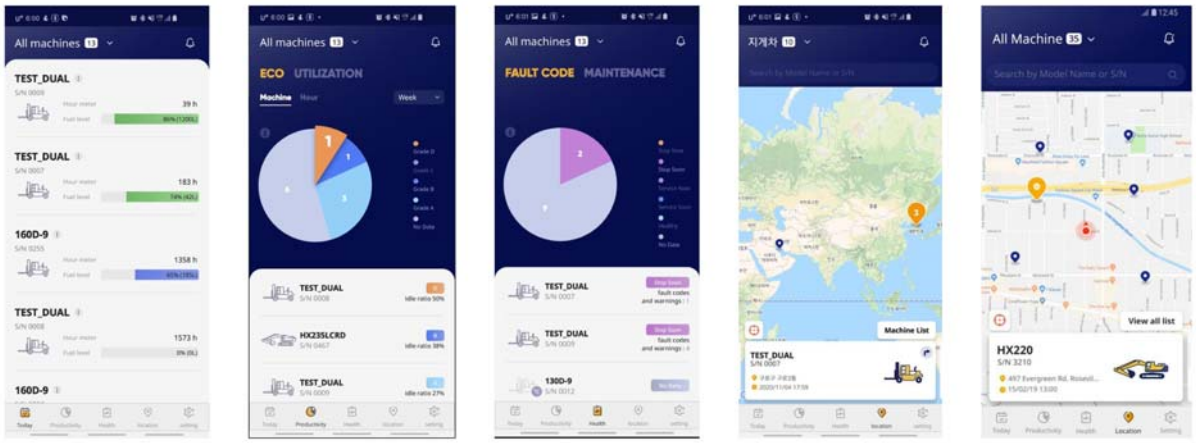

You can check equipment status, utilization rate, fault, position etc.

Easy to check

160D9V3HM21

11) HI-MATE (PREMIUM)

(1) Brief benefit

New features
- Built in Impact sensor : Detect and report the truck shock.
- RF ID tag : To use the truck, operator has to touch the ID CARD or enter Pin Nu
  (Login and Logoff time is on reporting via tele communication)

Case1 engine forklift
- During key on: Can't start the engine(disable engine start function)
- During Engine run: Unable to drive/work.(enable travel cut, attach cut)

Case2 Electric forklift:
- During key on(=machine run): cannot drive/work.(truck active : No status)

DRIVER MANAGEMENT

It is possible to certify drivers and manage their work through RFID or PIN password.

You can see when the driver has used and stopped the equipment.
You can also see how well the driver used the equipment.
(You can check the operating hours for each driver)

SAFETY MANAGEMENT

It provides a precheck & Collision & Over speed check function
Make sure the driver is ready to work
It provides collision information function
If a impact occurs, the impact event is sent to HMate.

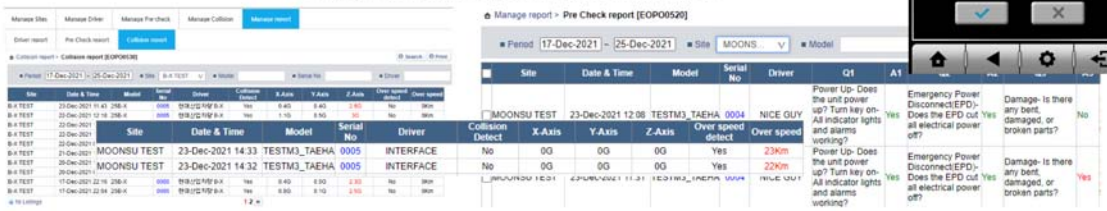

160D9V3HM22

(2) How to access menu

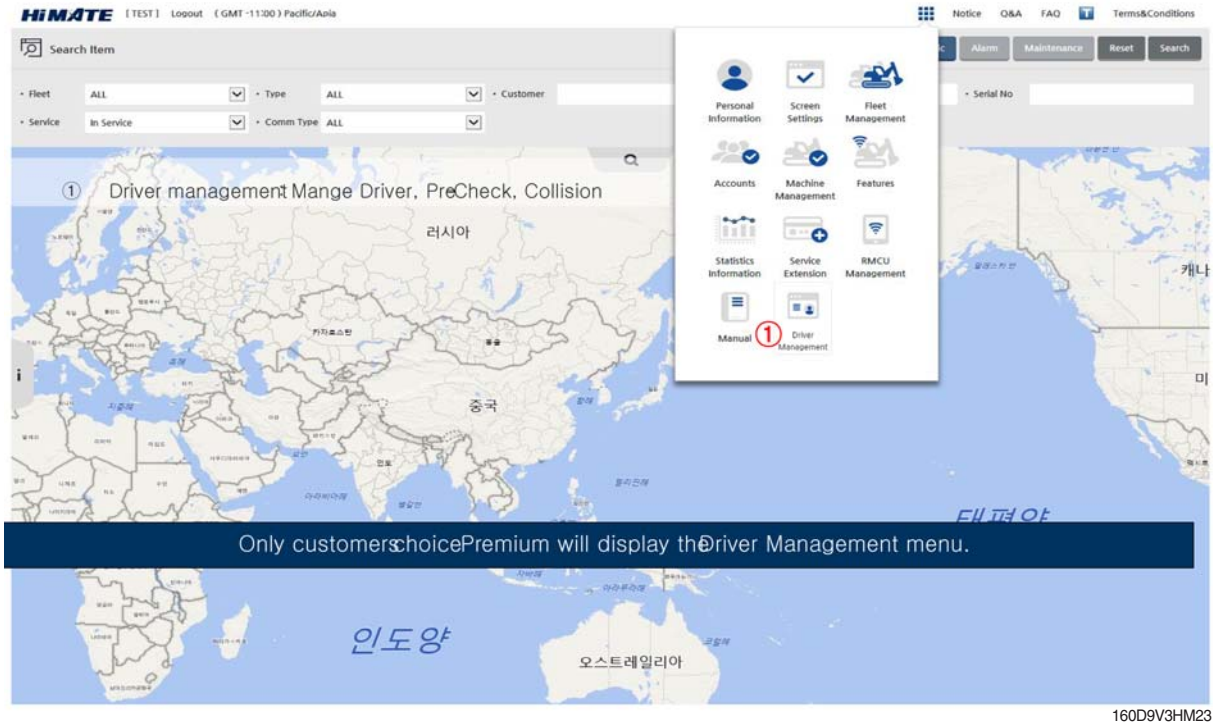

160D9V3HM23

(3) Manage sites

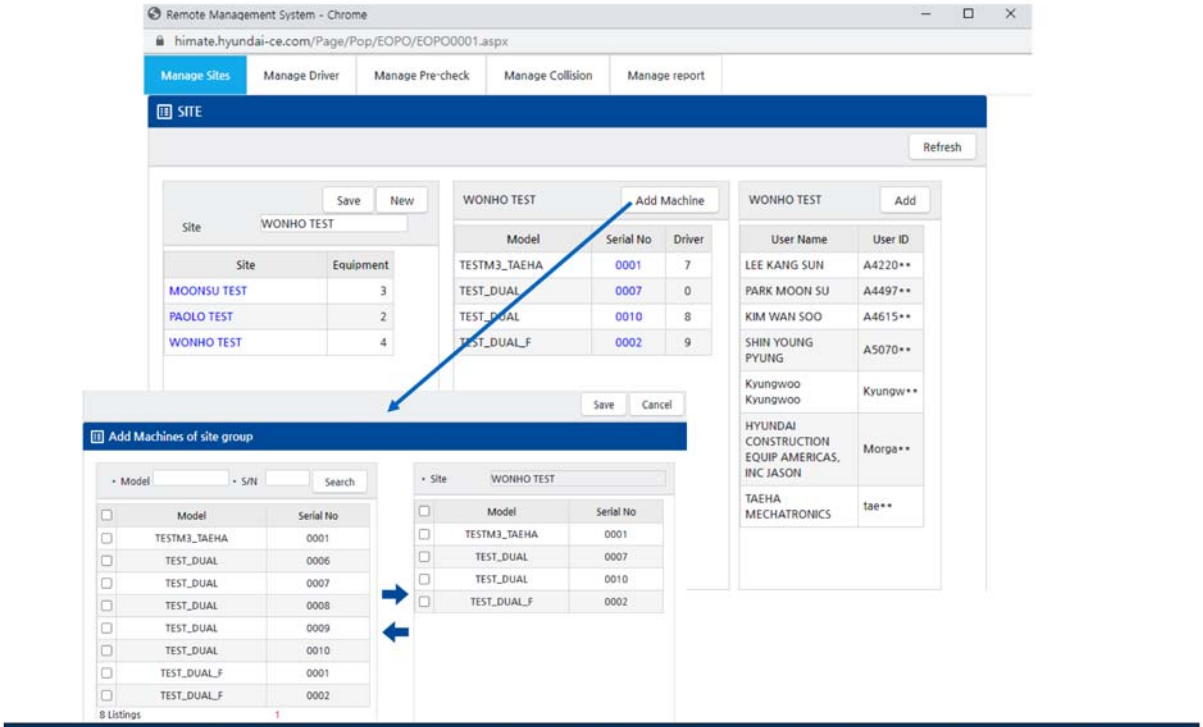

Equipments with the authentication device is queried, and you can register the equipment to the desired site.
You can also register SUB users with Site and manage them together

160D9V3HM24

(4) Manage drivers (use pin number)

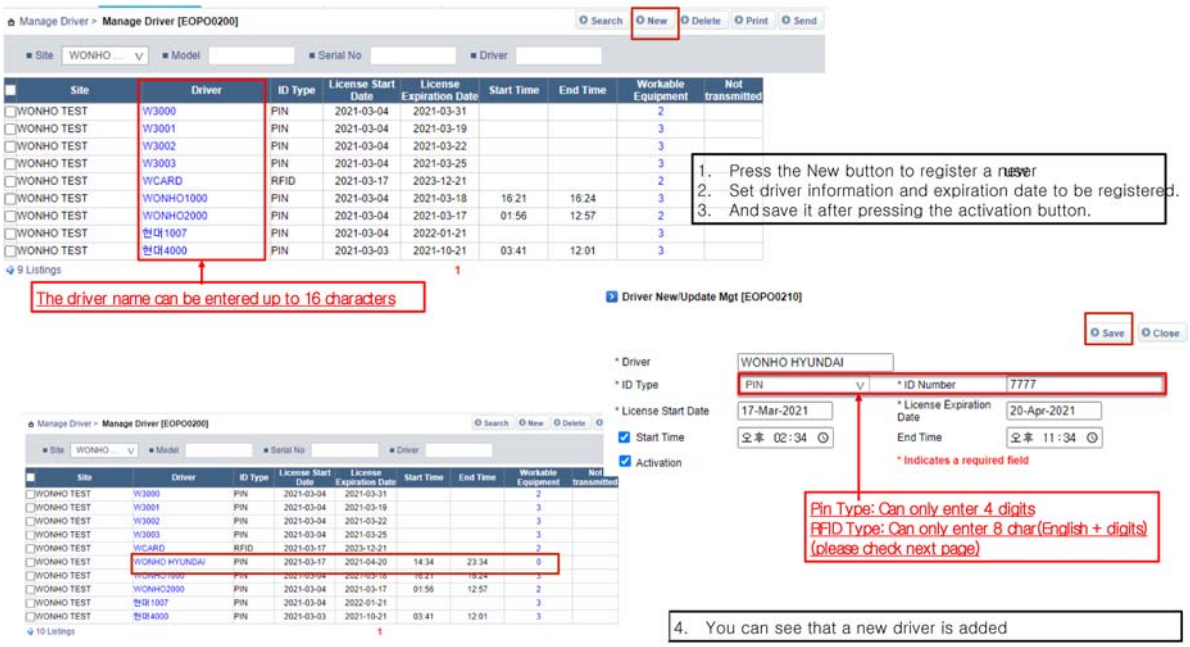

You can not register the same name for site. Likewise, the same PW is not registered. This must be unique.
The shift time setting is the your choice(start ~ end time)

160D9V3HM25

(5) Manage drivers (use RFID number)

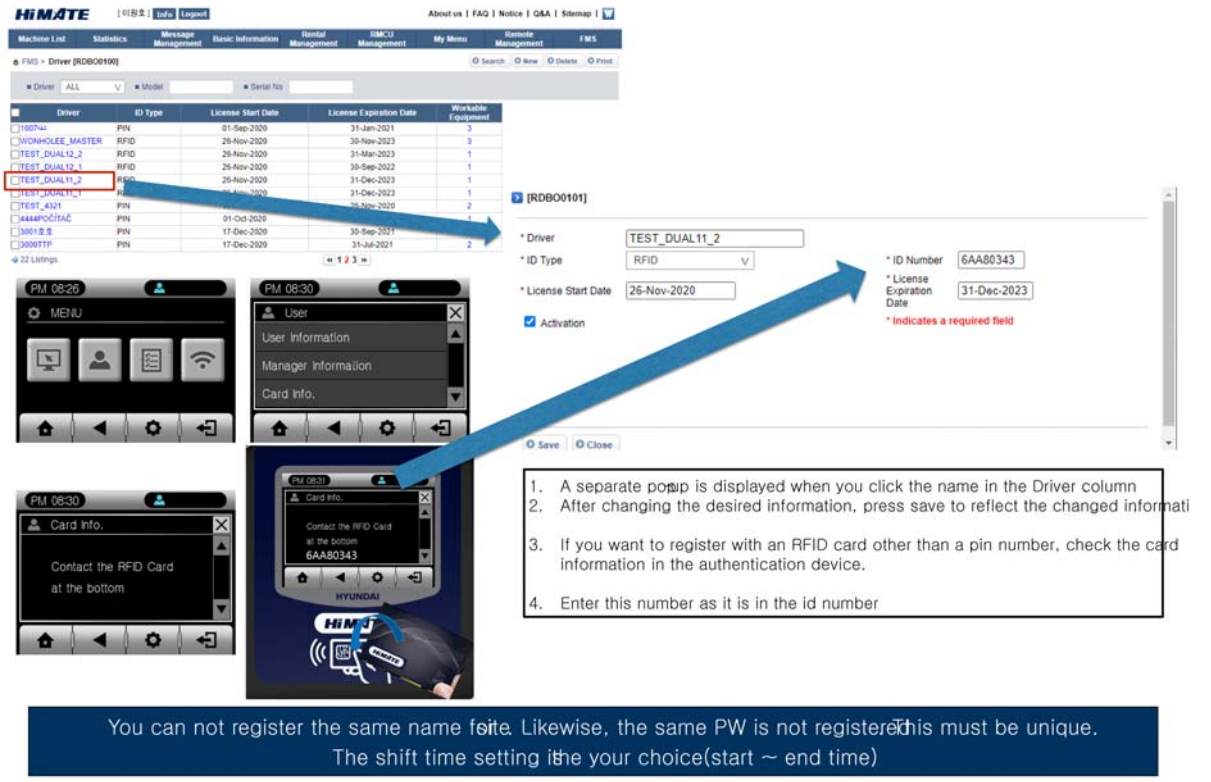

You can not register the same name for site. Likewise, the same PW is not registered. This must be unique.
The shift time setting is the your choice(start ~ end time)

160D9V3HM26

(6) How to register a driver to use the equipment

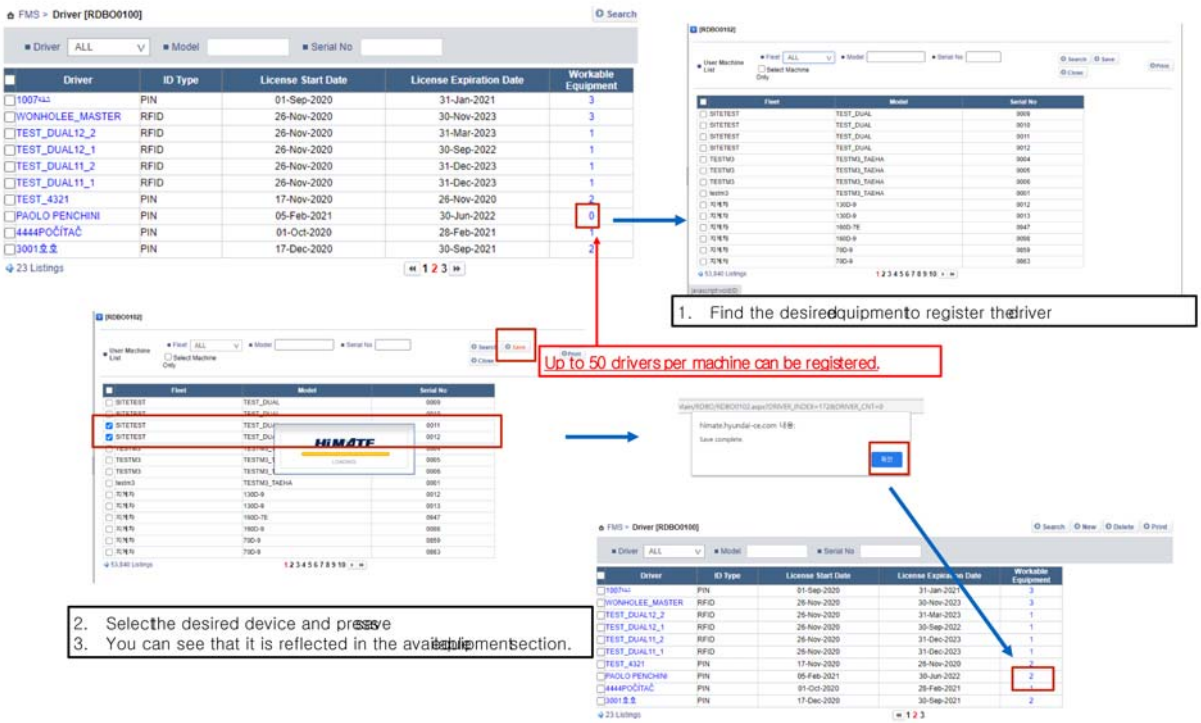

Machine registered on other sites is not inquiry or register.
If you want, you must release the equipment registered on another site.

160D9V3HM27

(7) How to check driver information in the authentication device

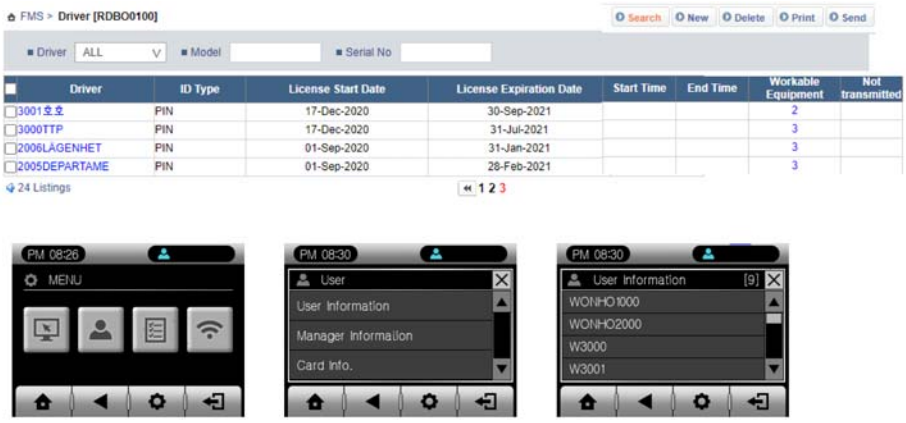

1. When registration is complete, it can be checked at the authentication device
2. For example, yogan see that the driver's name on the web is in user information.

Registered information is stored in the operating state(key on)

160D9V3HM28

(8) Manage pre-check

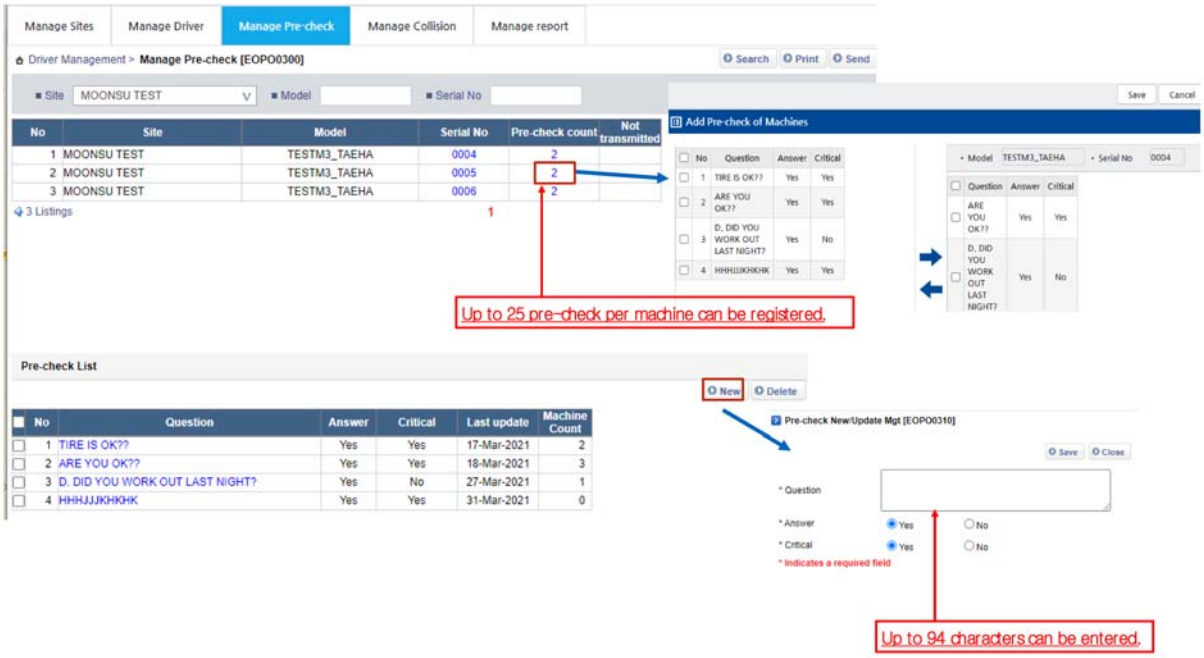

Please register the desired phrase first.
When set to CRITIAL, it is logged in to meet the set answer.
If not CRITICAL, it will be logged in as a set answer.

160D9V3HM29

(9) Manage collision and over speed

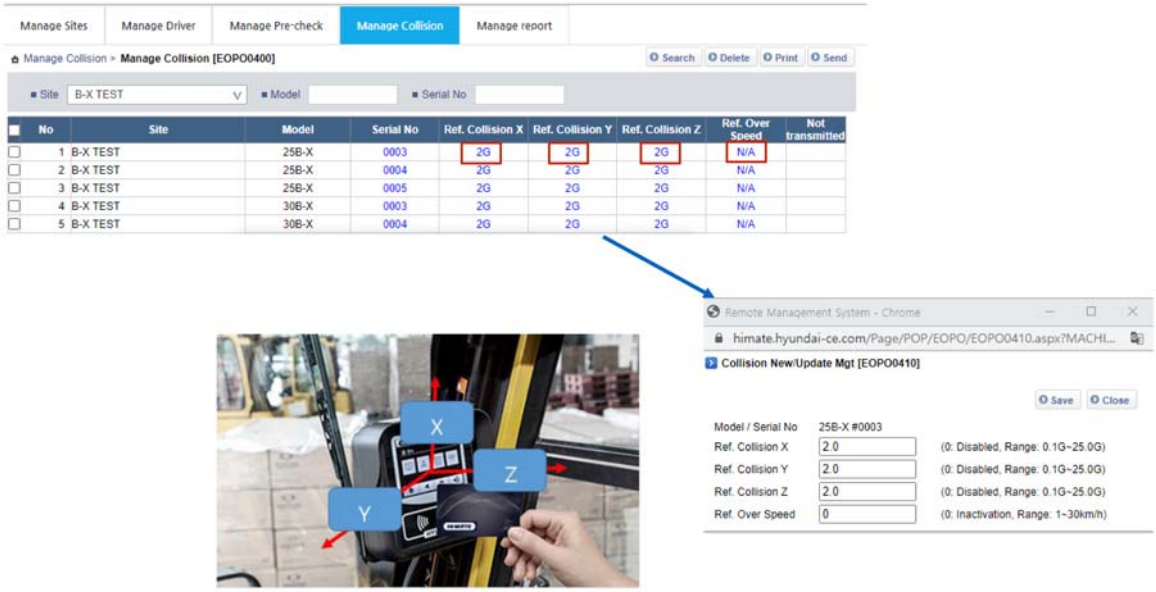

You can set the 'G' value that the crash or 'Over speed' event occurred.
If the G value is exceeded or the speed is checked, the event will occur immediately
(if it occurs several times in 1 minute, only 1 event will occur respectively)

160D9V3HM30

(10) Driver report

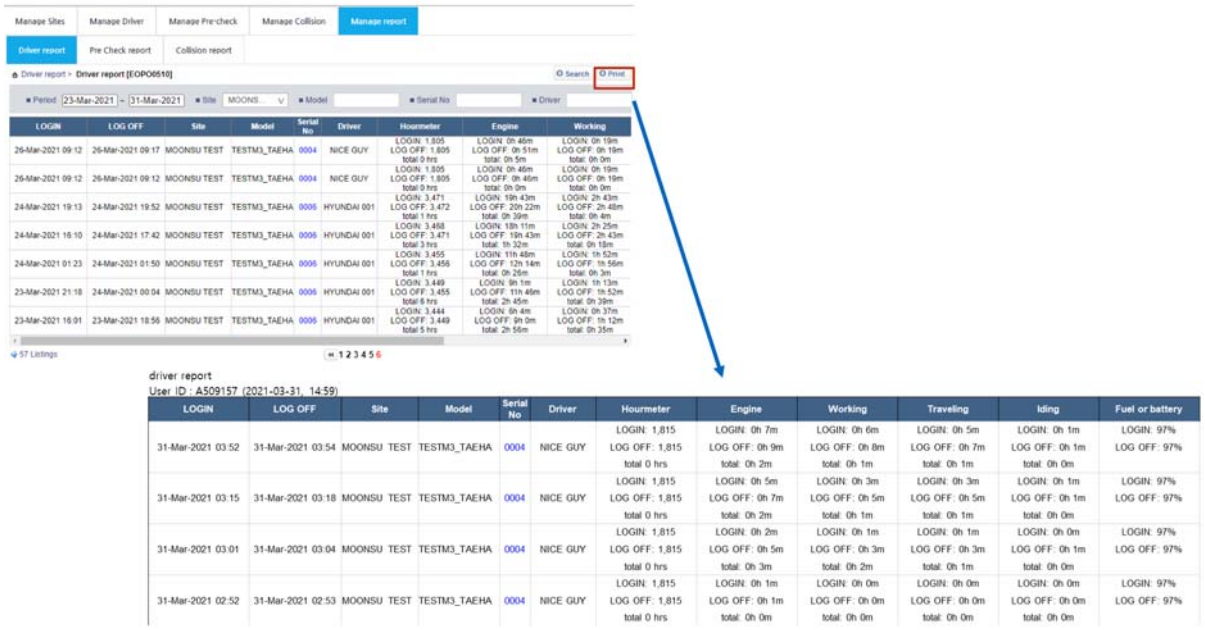

You can check the login and logoff information by the driver
This can be easily managed by output by Excel.

160D9V3HM31

(11) Pre-check report

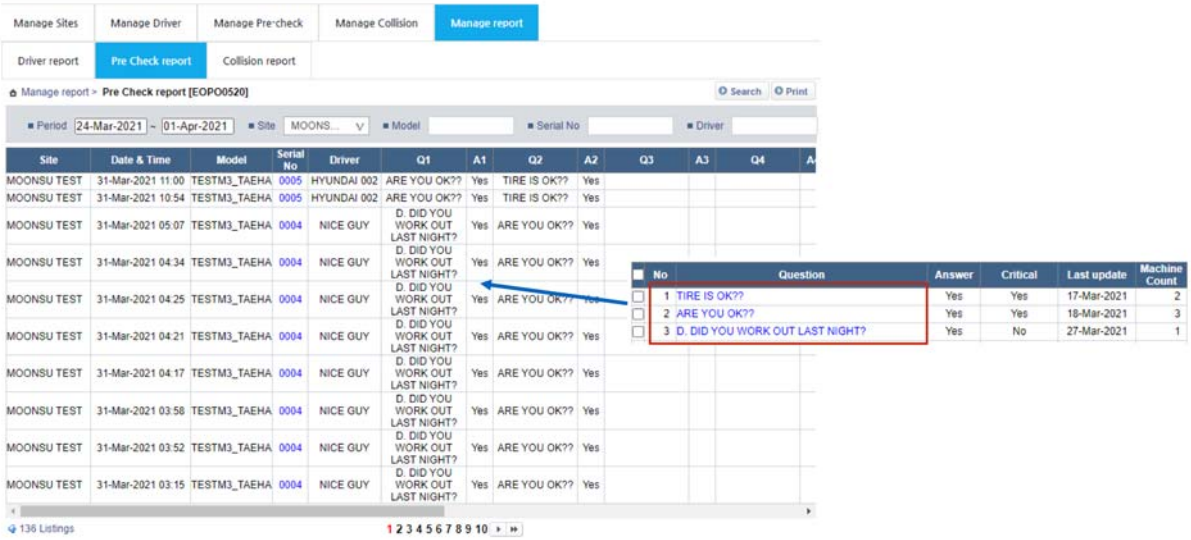

You can check the response to the registered questions
Questionshow randomly changed.
It is possible to manage with this or one Excel.

160D9V3HM32

(12) Collision and over speed report

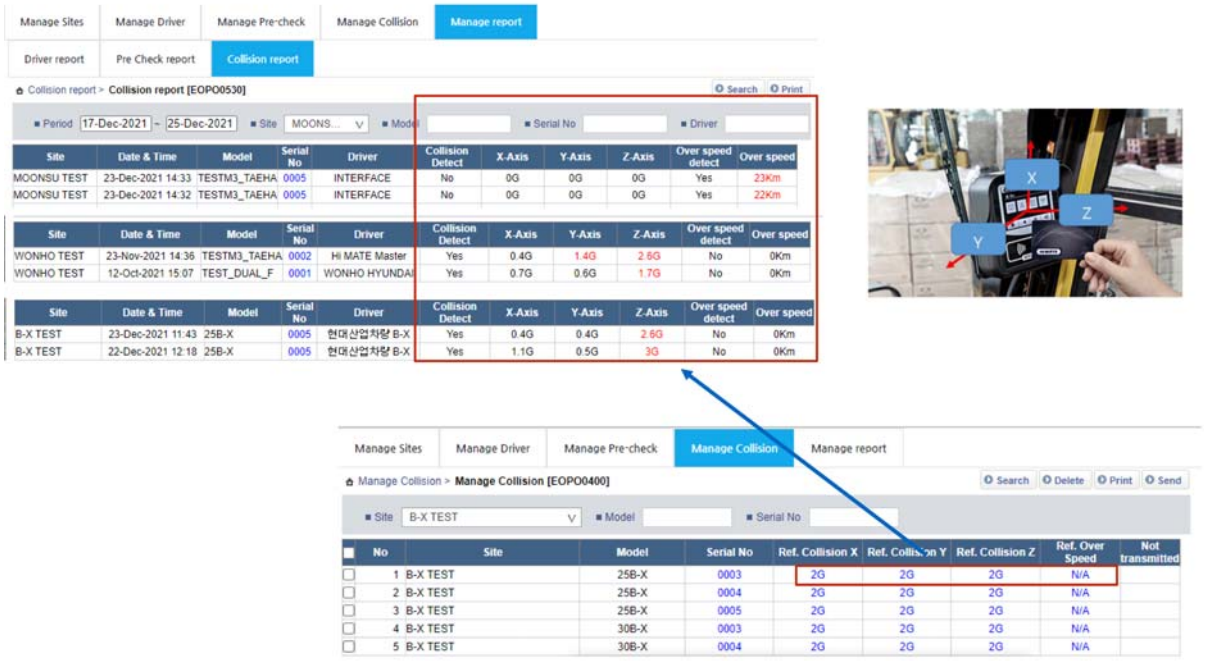

Event occurs when a value higher than the registered G value or over speed is measured.
It is possible to manage with this or one Excel.

160D9V3HM33

4. OPERATOR MAINTENANCE AND CARE

1. DAILY SAFETY INSPECTION

Before using a lift truck, it is the operator's responsibility to check its condition and be sure it is safe to operate.
Check for damage and maintenance problems; have repairs made before you operate the truck. Unusual noises or problems must be reported immediately to your supervisor or other designated authority.
Do not make repairs yourself unless you are trained in lift truck repair procedures and authorized by your employer. Have a qualified mechanic make repairs using genuine HYUNDAI or HYUNDAI-approved parts.

⚠ Do not operate a truck if it is in need of repair. If it is in an unsafe condition, remove the key and report the condition to the proper authority. If the truck becomes unsafe in any way while you are operating it, stop operating the truck, report the problem immediately, and have it corrected.

Lift trucks should be inspected every eight hours, or at the start of each shift. In general, the daily inspection should include the visual and functional checks described on the followings.

⚠ Leaking hydraulic oil may be hot or under pressure. When inspecting a lift truck, wear safety glasses and do not check for leaks with bare hands.

1) VISUAL CHECKS

First, perform a visual inspection of the truck and its major components;

(1) Walk around your lift truck and take note of obvious damage that may have been caused by operation during the last shift.

(2) Check that all capacity, safety, and warning plates or decals are attached and legible.

(3) Check before and after starting engine for leaking fuel, engine coolant, transmission fluid, etc.

(4) Check for hydraulic oil leaks and loose fittings.

⚠ Do not use bare hands to check. Oil may be hot or under pressure.

(5) Be sure that the driver's cabin load back rest and all other safety devices are in place, securely fastened and undamaged. Inspect for damaged or missing parts, corrosion, cracks, breaks etc.

(6) Check all of the critical components that handle or carry the load.

(7) Look the mast and lift chains over. Check for obvious wear and maintenance problems such as damaged or missing parts, leaks, slack or broken chains, rust, corrosion, bent parts, cracks, etc.

(8) Carefully inspect the load forks for cracks, breaks, bending, twists, and wear. Be sure that the forks are correctly installed and locked in their proper position.

(9) Inspect the wheels and tires for safe mounting, wear condition, and air pressure.

(10) Check the hydraulic oil level, engine oil level, and fuel level.

2) FUNCTIONAL CHECKS

Check the operation of the truck as follows.

※ **Before performing these checks, familiarize yourself with the starting, operating, and shutdown procedures in Section 5 of this manual. Also, know the safety rules given in Section 1 of this manual.**

(1) Test warning devices, horn, light, and other safety equipment and accessories.

(2) Start the engine and be sure all controls and systems operate freely and return to neutral properly. Check the:

① Gauges, meters, and indicator lights
② Service brakes, inching pedal, and parking brakes
③ Hydraulic controls: lift, tilt, and auxiliary (If installed)
④ Accelerator
⑤ Directional control
⑥ Steering system
⑦ Lift mechanism and any attachments.

When the functional check are completed, follow the **standard shutdown procedures** given in Section 5, **Starting and operating procedures**.

3) CONCLUDING THE INSPECTION

⚠ **Do not operate a lift truck that has a maintenance problem or is not safe to operate.**

(1) Instead, remove the key from the starting switch and put an **Out of service tag** on the truck.

(2) If all of the daily inspection checks were normal or satisfactory, the truck can be operated.

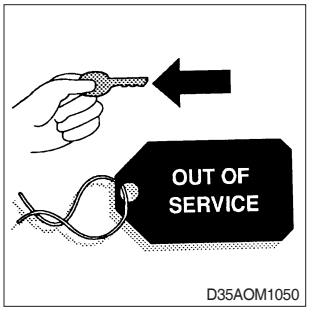

2. SUGGESTION FOR NEW TRUCK

1) It takes about 100 operation hours to enhance its designed performance.

2) Operate according to below three steps and avoid excessive operation for the initial 100 hours.

Service meter	Load
Until 10 hours	About 60%
Until 100 hours	About 80%
After 100 hours	100%

※ Excessive operation may deteriorate the potential performance of truck and shorten lifetime of the truck.

3) Be careful during the initial 100 hours operation.

(1) Check daily for the level and leakage of coolant, engine oil, hydraulic oil and fuel.

(2) Check regularly the lubrication and fill. Grease daily all lubrication points.

(3) Tighten bolts.

(4) Warm up the truck fully before operation.

(5) Check the gauges during operation.

(6) Check if the truck is operating normally during operation.

4) Replace following after initial hours of operation

Checking items	Service
Engine oil	50
Engine oil filter element	
Differential gear oil	100
Transmission oil	
Transmission oil filter	
Hydraulic oil return filter	250

3. FUEL SAFETY PRACTICES

REFUELING DIESEL TRUCKS

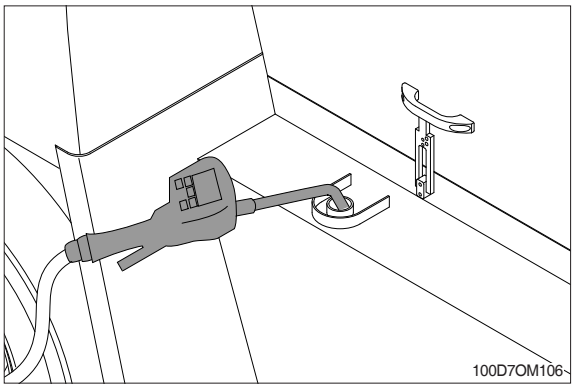

⚠ Stop the engine when refueling.
All lights and flames shall be kept at a safe distance while refueling.

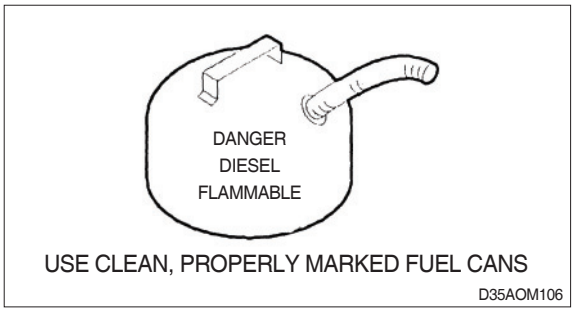

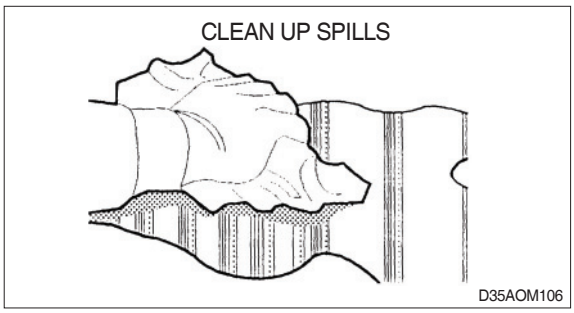

4. ENGINE OIL SERVICE INTERVAL AND MANAGEMENT

It is the operator's responsibility to check its condition and be sure it is safe to operate. Please check engine oil condition periodically.

1) Daily check

· Engine oil should be checked once a day before operation.

2) Periodic check

· Service should be done whichever comes first from operating hours or usage period.

· Be sure to use prescribed engie oil.

Service item	Action	Service interval	
Engine oil and oil filter	Replace	General condition	Harsh condition
		Every 500 hours or 1year	Every 250 hours or 6 months

※ **This oil service interval can be different by engine models.**

Harsh condition is as follows.

1. Repeated short operation (repeated cold operation)
2. Frequent driving in sandy or dusty places
3. When using excessive engine idle
4. Frequent driving on uphill and downhill roads
5. Frequent driving with rapid acceleration/deceleration or continuous high-load
6. When operating in salt, corrosion or low temerature conditions

3) Problems with poor engine oil management

(1) Excessive or little engine oil filling

Engine oil quantity (lower)	① Damage on E/G moving parts with poor lubrication due to premature E/G oil deterioration ☞ Crankshaft, camshaft, conrod bearing, piston scuffing, etc. ② Damage on moving parts due to aeration in E/G oil, etc	Oil level gauge unchecked after filling E/G oil
Engine oil quantity (over)	① Damage on after-treatment unit due to excessive blow-by gas ② Dieseling due to excessive blow-by gas ③ Damage (melting) on piston due to E/G oil flow into combustion chamber ④ Injector tip burnout and E/G hestiation due to abnormal combustion by E/G oil in combustion chamber	

※ **This service interval is for R-engine model.**

< Problem picutres >

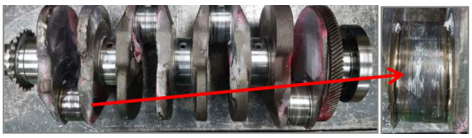

< Crankshaft pin seizure >

< Connecting rod bearing seizure >

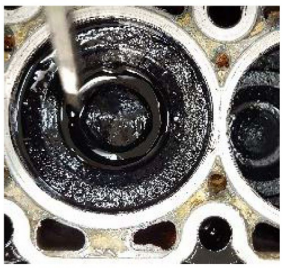

< Engine oil in combustion chamber >

< Connecting rod broken >

(2) Engine oil contamination (neglecting daily and periodic check)

Gelled	① Excessive wear and seizure of turbocharger shaft bearings due to delayed oil supply to turbocharger ② Excessive wear and seizure of crankshaft main bearing ③ Excessive oil consumption due to piston scuffing and cylinder block bore scratches ④ Excessive wear and seizure of connecting rod bearings ⑤ Excessive wear and seizure of cam shaft bearings ⑥ Engine power reduction and hesitation due to poor autolash ⑦ Excessive chain noise due to poor timing chain tensioner ⑧ Wear and burnout due to lack of lubrication of timing chain lever, guide	Checking and replacement not performed Water inflow etc
Viscosity (high)		

< Problem picutres >

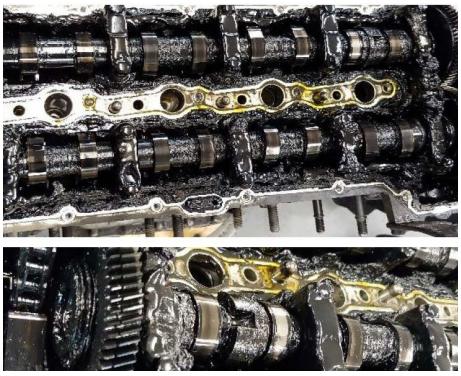

< Contaminated and gelled engine oil >

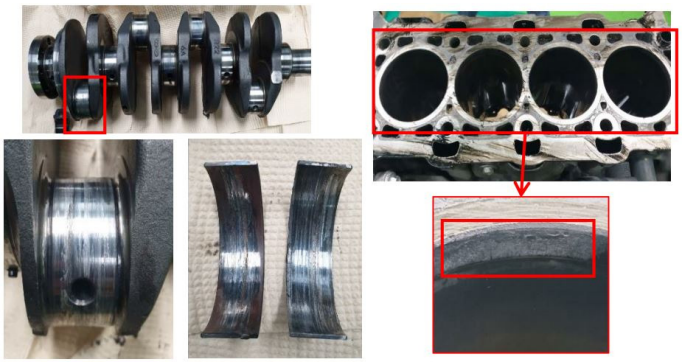

< Excessive wear of moving parts >

5. STARTING AND OPERATING PROCEDURES

1. BEFORE OPERATING THE TRUCK

Be sure that you have read and understand the information in this Operator's Manual and are trained and authorized before operating the lift truck.

⚠ A lift truck can be dangerous if not used properly. Safe operation is the responsibility of the operator.

⚠ Do not start or operate the truck, or any of its functions or attachments, from any place other than the designated operator's position.

⚠ Inspect your lift truck before operating at the start of each shift. Before putting your truck to use, check the operation of the controls and all systems.

⚠ Protect yourself. Do not operate truck without closing the cabin door or without fastening seat belt unless conditions prevent its use.
Use special care if operation without these safety rules are required.

2. CHECK BEFORE OPERATION

1) The Occupational Safety and Health Act (OSHA) required that truck users examine their trucks before each shifts to be sure they are in safe working order. Defects when found shall be immediately reported and corrected. The truck shall be taken out of service until it has been restored to safe operating condition.

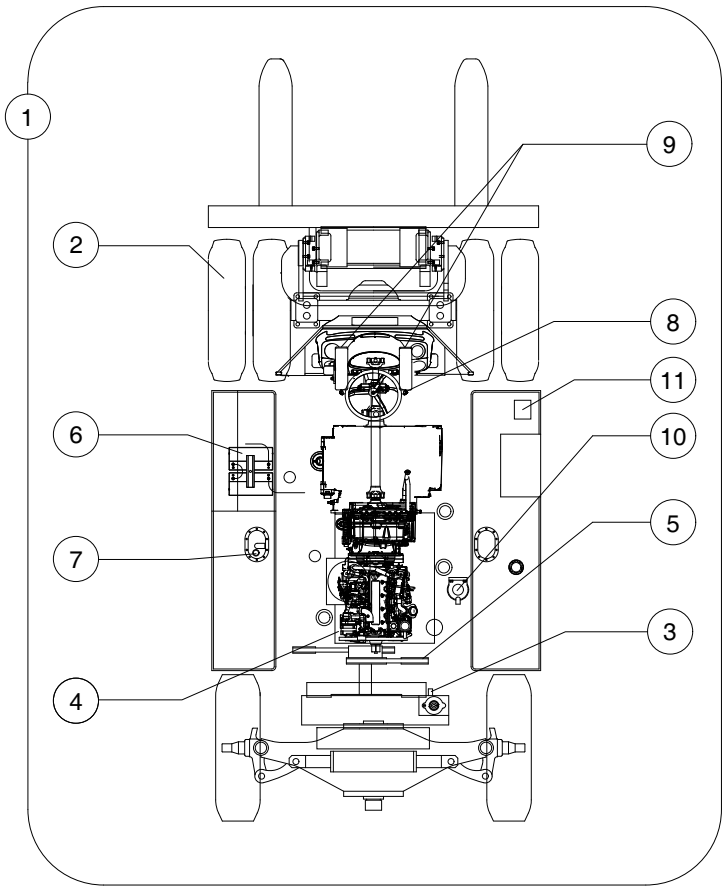

1 Oil leakage
2 Tire air pressure
3 Coolant level
4 Engine oil level
5 Fan belt tension
6 Battery
7 Hydraulic oil level
8 Multi function switch
9 Pedals
10 Fuel filter, Fuel prefilter
11 DEF level

70D9V5SO01

2) A thorough walk-around check should be made BEFORE starting engine. This is required for your personal safety and to realize maximum service life for your truck.
① The numbers on the inspection chart show the order of inspection
② These numbers correspond to the check item numbers given on the next pages.
③ Hang a caution sign on the truck (for example, **Do not start** or **Maintenance in progress**).
This will prevent anyone from starting or moving the truck by mistake.

3. CHECK BEFORE STARTING ENGINE

1) CHECK FOR WATER OR OIL LEAKAGE

(1) Walk around your HYUNDAI truck and check for water, oil or hydraulic leakage. Examine truck for obvious damage.

(2) Check cabin, backrest, forks, mast and lift chanins for crack or obvious damage.

(3) If any damage or leaks are detected contact your HYUNDAI dealer or tire repair shop.

2) CHECK TIRE AIR PRESSURE/CHECK TIRE RIM

- **Air pressure and torque**

Item	Unit	Front tire and rear tire
		9.00-20-14PR
Tire air pressure	kgf/cm^2	7.5
	psi	110
	bar	7.35
Hub nut tightening torque	kgf·m	49 ~ 73
	lbf·ft	356 ~ 530
	N·m	480 ~ 716

⚠ **The tires are under high inflation pressure, so failure to follow the correct procedures when changing or servicing tires and rims could cause the tire to explode, causing serious injury or damage. The tires and rims should always be serviced or changed by trained personnel using the correct tools and procedures. For details of procedures, contact your HYUNDAI dealer or tire repair shop.**

⚠ **If there is any deformation, damage, or wear of the rim, or any doubt about the condition, always replace the rim. Never try repairing, welding, or heating.**

3) CHECK COOLANT LEVEL

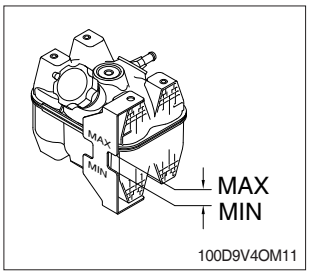

(1) If the cooling water in the radiator reservoir tank is not within normal range when cool, add water to the MAX line.

⚠ If antifreeze is being used, pay careful attention to the ratio of antifreeze and water when adding coolant.

⚠ If the surge tank is completely empty, first add water directly to the surge tank.
Always allow the radiator to cool down before adding water.
At the operating temperature, the engine cooling water is at high temperature and pressure, so it is dangerous to try to open the surge tank cap. Wait until the radiator is cool enough to be touched by hand before opening the surge tank cap. Loosen the surge tank cap slowly to release the pressure, then loosen the cap.

4) CHECK OIL LEVEL IN ENGINE OIL PAN

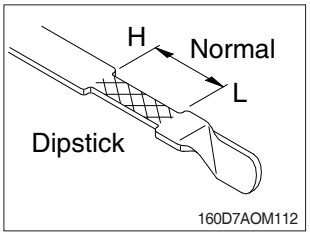

(1) Stop the engine, pull out the dipstick and check the oil level.

(2) The oil surface line on the dipstick should be between H and L. If below L, remove the filler cap and add engine oil through the oil level.

※ Change the oil if it is marked dirty or discolored.

⚠ Oil level is to be checked with the truck placed at flat level and at least 3 minutes after the engine stopped.

⚠ Do not touch hot components or allow hot oil to contact your skin.

5) CHECK FAN BELT

(1) An deflection method can be used to check belt tension by applying 11 kgf (25 lbf) force between the pulleys on V-belts. If the deflection is more than one belt thickness per foot of pulley center distance, the belt tension must be adjusted.

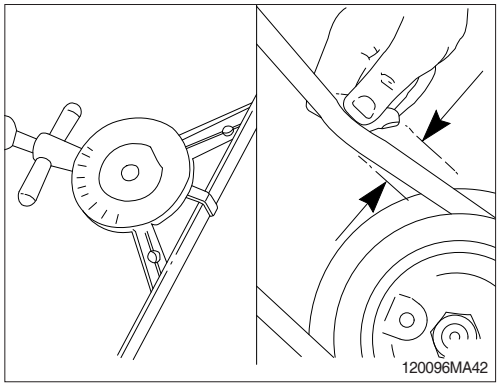

(2) Inspect the fan belt for damage.

① Transverse (across the belt) cracks are acceptable.

② Longitudinal (direction of belt ribs) cracks that intersect with transverse cracks are not acceptable.

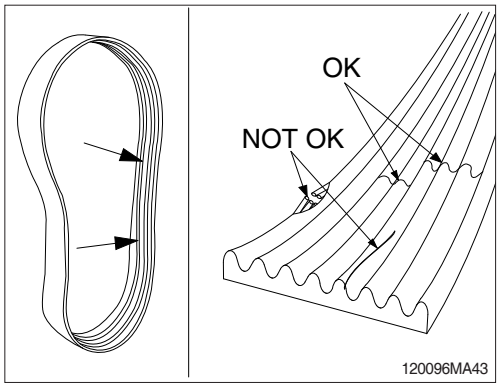

③ Inspect the belt
- Embedded debris
- Uneven/excessive rib wear
- Exposed belt cords
- Glazing (high heat)

※ **If any of the above conditions are present, the belt is unacceptable for reuse and must be replaced.**

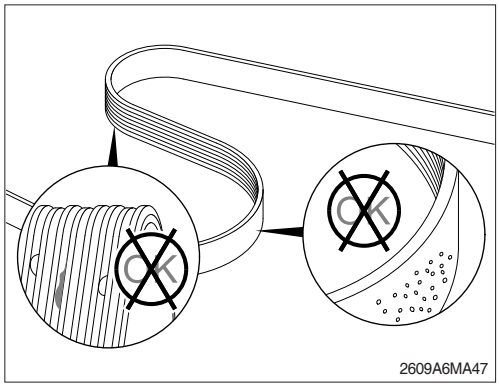

6) INSPECTION OF COOLING FAN

⚠ Personal injury can result from a fan blade failure. Never pull or pry on the fan. This can damage the fan blade and cause fan failure.

※ Rotate the crankshaft by using the engine barring gear.

※ A visual inspection of the cooling fan is required daily.
Check for cracks, loose rivets, and bent or loose blades.
Check the fan to make sure it is securely mounted. Tighten the capscrews if necessary.
Replace any fan that is damaged.

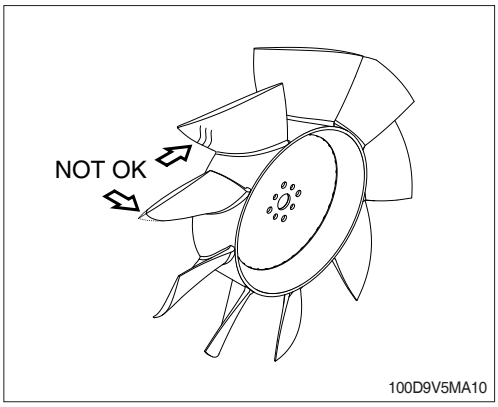

7) BATTERY

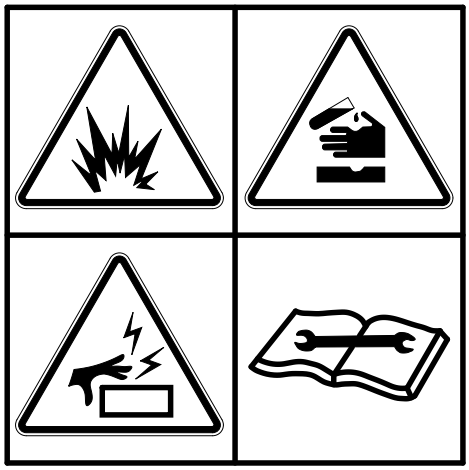

(1) Wash the terminal with hot water if it is contaminated, and apply grease to the terminals after washing.

⚠ Battery gas can explode. Keep sparks and flames away from batteries.

⚠ Always wear protective glasses when working with batteries.

⚠ Do not stain clothes or skin with electrolyte as it is acid.
Be careful not to get the electrolyte in eyes.
Wash with clean water and go to the doctor if it enters the eyes.

※ Make sure to keep the batteries fully charged at all times, when operating the truck in cold weather.

8) CHECK HYDRAULIC OIL LEVEL

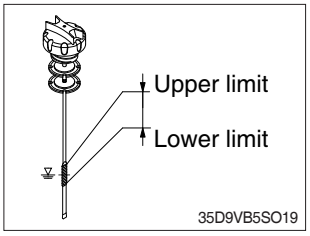

(1) Rest fork on ground and stop engine.

(2) Check the oil level from the cap of hydraulic oil tank.

9) CHECK FUEL PREFILTER

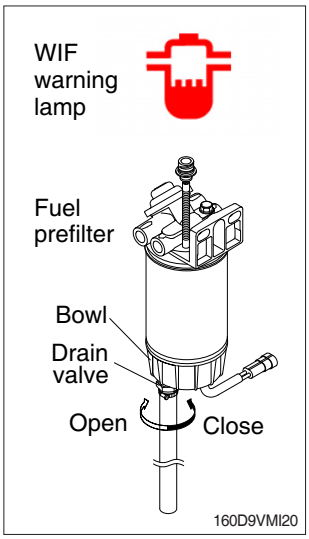

(1) WIF (Water in fuel) warning lamp.
If the warning lamp stays on, drain the water from the fuel prefilter.

10) MULTI FUNCTION SWITCH

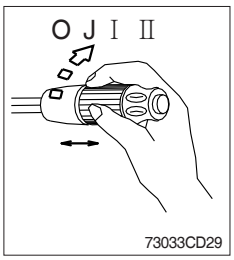

(1) Front wiper and washer switch

① When the switch is in J position, the wiper moves intermittently.
② When placed in Ⅰ or Ⅱ position, the wiper moves continuously.
③ If you push the grip of the lever, washer liquid will be sprayed and the wiper will be activated 2-3 times.

※ **Check the quantity of washer liquid in the tank. If the level of the washer liquid is LOW, add the washer liquid (In cold, winter days) or water. The capacity of the tank is 1 liter.**

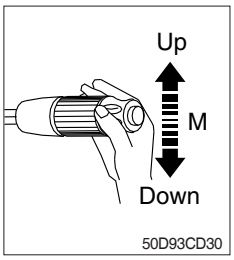

(2) Dimmer switch

① This switch is used to turn the head light direction.
② **Switch positions**
- Up : To flash for passing
- Middle : Head light low beam ON
- Down : Head light high beam ON

③ If you release the switch when it's in up position, the switch will return to middle.

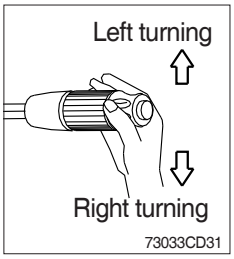

(3) Turning switch

① This switch is used to warn or signal the turning direction of the truck to other vehicles or equipment.
② Push the lever up for turning left, pull the lever down for turning right.

4. SEAT ADJUSTMENT

1) SEAT ADJUSTMENT

The seat adjustable to fit the contours of the operator's body. It will reduce operator fatigue due to long works hours and enhance work efficiency.

Grammer seat

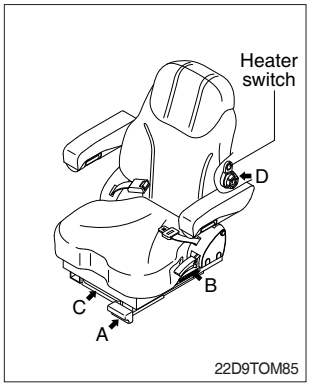

(1) Forward/Backward adjustment (A)

① Pull lever A to adjust seat forward or backwards.

(2) Reclining adjustment (B)

Pull lever B to adjustment seat backrest.

(3) Weight adjustment (C)

(4) Lumbar adjustment (D)

Turn line knob D to adjust lumbar support up and down.

(5) Heated seat switch (option)

Press this switch in order to heat the seat.

2) BUCKLING UP

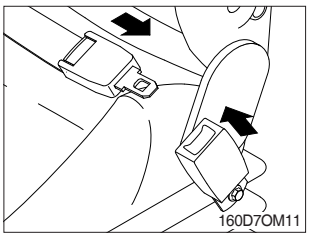

(1) Buckling up. Be sure that you put on the seat belt. Connect and adjust the seat belt strap to a snug, comfortable position.

Always wear your seat belt when operating a lift truck. Failure to wear seat belt will result in injury or death in an event of an accident.

⚠ Always check the condition of the seat belt and mounting hardware before operating the truck.

⚠ Replace the seat belt when it has been used in a severe accident or shows signs of severe fraying or having been cut.

5. STARTING FROM A SAFE CONDITION

Always start from a safe condition.
Before operating a lift truck, make sure that :

- You are safely seated in the truck.
- Seat belt is buckled up.
- The parking brake is applied.
- The forks are fully lowered to the floor or ground.
- You are familiar with how all the controls function.
- All controls are in neutral or other correct position.
- The truck has received its daily inspection and ready and safe to operate.

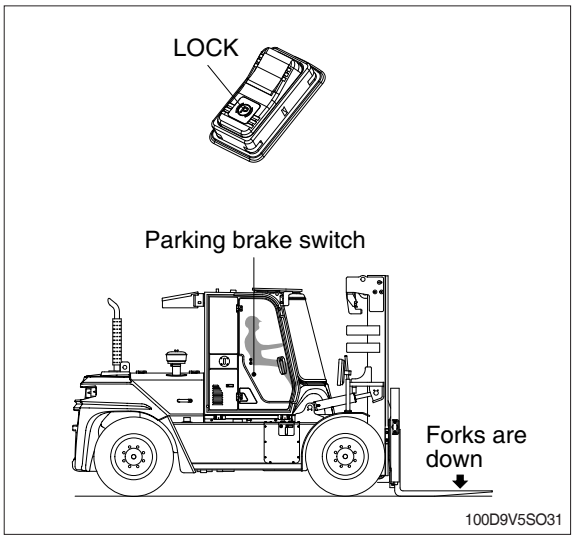

Put the gear selector lever in the NEUTRAL position, before starting. The truck should start only in the NEUTRAL position. If it starts in gear, have the truck serviced.

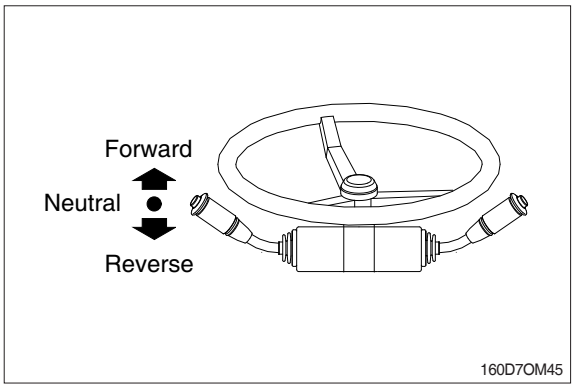

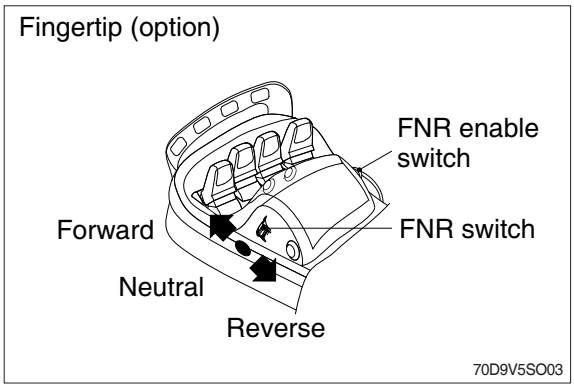

6. GENERAL STARTING AND OPERATING TIPS

Before you start the truck, make sure that you have taken all the above-mentioned precautions, you have read this manual, you are starting from a safe condition, with the directional control in NEUTRAL, the seat adjusted, and your seat belt buckled.

⚠ **INSPECT YOUR LIFT TRUCK BEFORE OPERATING at the start of each shift. Before you put your truck to use, check the operation of the controls and all systems.**

Turn off any lights or optional electrical equipment while you crank the engine. This reduces the electrical load on your battery.

Avoid excessive starter cranking (In excess of 30 seconds). To avoid starter overheating or damage, do not crank the starter continuously for more than 30 seconds at a time. If the engine fails to start, wait two to three minutes before again attempting to start your lift truck.

If your battery is run down (discharged) or becomes discharged while you try to start your truck, please refer to Chpater 6, EMERGENCY PROCEDURES in this manual.

To avoid damage to your truck or possible harm to yourself. Follow these recommendations :

- Warm the engine up before driving or applying a load. Idle engine at low idle rpm for a few minutes to circulate and warm the oil. Then increase speed to approximately half-throttle for a short period or until the engine coolant reaches approximately 37.8˚C. This procedure helps prolong engine life.
- Let the engine run until the normal operating temperature is reached. Then operate the controls and check all gauges and warning indicators to be sure they are functioning properly. Stop the engine and make a visual inspection for oil, water, or fuel leaks.
- Do not operate the engine at speeds above idle for more than brief periods without a load.
- Do not run the engine at maximum power continuously until the engine is fully warmed up.
- Never operate the engine at more than the regular no-load governed speed. Excessive speeds are harmful.

※ **The governor is set at the factory and should not need adjustement.**

- Avoid extended (in excess of 10 minutes) and unnecessary idling of the engine. Turn off the engine instead.
- **Carbon monoxide** is colorless and odorless, but can be present with all other exhaust fumes.

⚠ **Exhaust gases are harmful and can cause serious injury or death. Proper ventilation is always necessary for safe inside operation or warm-up.**

⚠ **Due to the precise, tolerances of diesel injection systems, it is extremely important that the diesel fuel be kept clean and free of dirt or water. Dirt or water in the system can cause severe damage to both the injection pump and the injection nozzles.**

7. STARTING THE ENGINE

1) START FROM A SAFE CONDITION

Before you start the truck, safely seat yourself on the truck, fasten seat belt, apply the parking brake, make sure all controls are in neutral or other correct position, lower the forks fully to floor or ground, put the gear selector lever in NEUTRAL, and make sure you know how to operate the truck and all its controls.

Cold Start Preheating

With the switch in the ON position the indicator will light up showing the glow plugs are pre-heating automatically, after 6 seconds the indicator light will go out. The engine can then be started. For improved starting, pre-heating is continued for about 5 seconds after the indicator light has gone out. To repeat the preheating process turn the key to the OFF and then into the ON position.

⚠ DO NOT USE STARTING FLUID to help start an engine. The fluid contains ether or other explosive substances that could cause serious injury. Starting fluid is especially dangerous when used on engines with glow plugs. Never use starting fluid with a glow plug equipped engine.

2) Turn the start switch to the START position to crank the engine. Release the key the ON position and return the accelerator to idle as soon as the engine starts.

※ If the engine stalls or falters in starting, wait two to three minutes before re-engaging the starter. This prevents possible serious damage to the starter or engine.

3) When starting a cold engine, increase the engine speed (rpm) slowly to be sure adequate lubrication is available to the bearings and to allow the oil pressure to stabilize.

4) Idle the engine three to five minutes at idle rpm before operating with a load.

8. CHECK AFTER STARTING ENGINE

1) CHECK FOR ABNORMAL NOISE OR VIBRATION

2) CHECK ENGINE EXHAUST GAS COLOR

Exhaust gas color	Criteria
Colorless, light blue	OK
Black	Check for incomplete combustion
White	Check for oil leakage

3) CHECK FUEL TANK LEVEL

70D9VB3KY31

If the indicator is in the **Full** range, the tank is full. If the indicator is in the **Empty** range, refill the fuel tank immediately. Do not operate the truck below this level. Do not use low quality fuel or fuel mixed with kerosene. Clean the area around the cap before adding fuel to prevent dirt from entering the tank.

Always fill the tank at the end of the day's operation. If air remains in the tank, the moisture in the air will condense inside the tank and form water in the fuel.

※ **The moisture in the fuel system can be caused a difficulty of the engine starting and may lead to a serious problem for the engine function.**

⚠ **Do not smoke or allow any flame near the truck when refilling. Refilling produces explosive fumes. The truck should be refilled only at the specified refilling point.**
Stop the engine and get off the truck when refilling.

4) CHECK CLUSTER

※ These lamps light up to indicate an abnormality.
So, if one of these lamps is lighted, take appropriate service and maintenance.

※ Cluster warning lamps light up to indicate an abnormality. (refer to CLUSTER.)

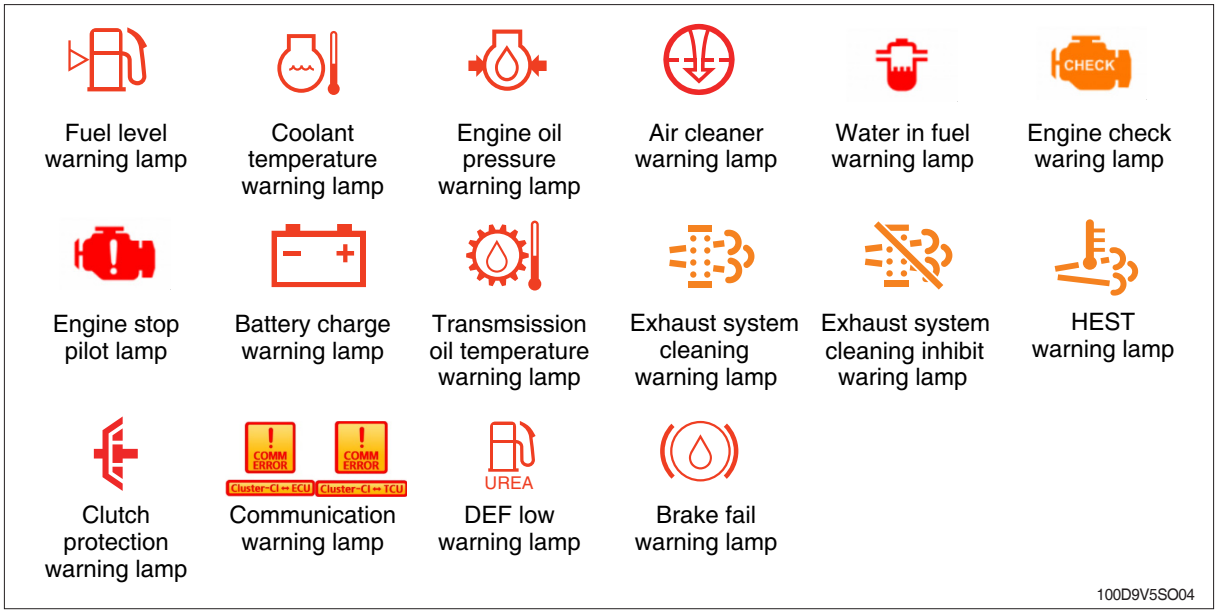

5) CHECK STEERING WHEEL PLAY

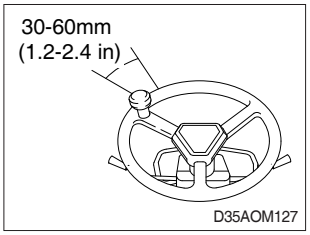

If the steering wheel play is over 30 ~ 60 mm (1.2 ~ 2.4 in), check or repair it.

6) CHECK LIFT CHAIN TENSION

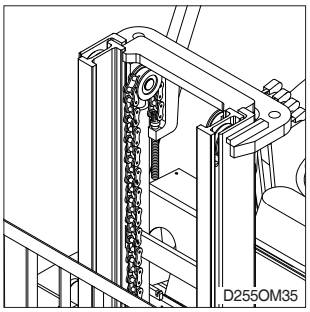

Raise forks 100 to 150 mm (4 to 6 in) from ground. Push with a rod check that both chains have approximately same amount of slack.

· Adjusting lift chain

① Loosen locknut and turn nut.

② Equalize tension on the lift chain.

⚠ Do not put hands into the mast.

7) CHECK STEERING WHEEL

Check that steering wheel does not wobble or suddenly pull to one side. Check also for any abnormal heaviness in steering.

8) CHECK REARVIEW MIRROR (option)

Adjust the rearview mirror for best rearward visibility.

9. WARMING UP OPERATION

※ **The most suitable temperature for the hydraulic oil is about 50˚C (112˚F).**
It can cause serious trouble in the hydraulic system by sudden operation when the hydraulic oil temperature is below 25˚C (77˚F).
The temperature must be raised to at least 25˚C (77˚F) before starting work.

1) Run the engine at low idling for 5 minutes.

2) Speed up the idling and run the engine at mid-range speed.

3) Lift the forks slightly and tilt the mast forward to the stroke end to relieve hydraulic pressure.

※ **Do not leave hydraulic pressure relieved for more than 30 seconds.**

4) Tilt back to the stroke end to relieve hydraulic pressure.

※ **Do not leave hydraulic pressure relieved for more than 30 seconds.**

5) Repeat the procedure 3) - 4) several times until warm-up operation is completed.

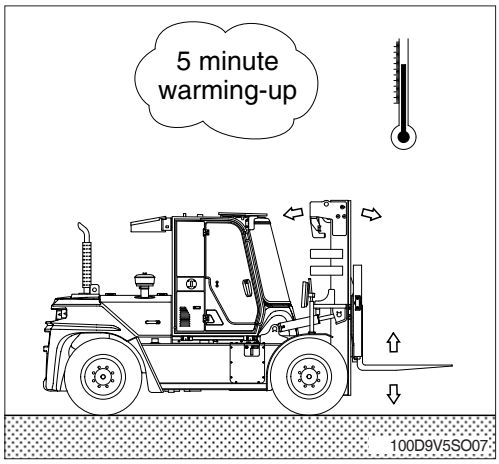

10. LEVERS AND PEDALS

1) POSITIONING FORKS AND MAST

When driving, with or without a load, it is a good practice to always raise the forks slightly and tilt the mast (forks) backward. Raising the forks and tilting them back prevents the fork tips from catching on possible obstructions and reduce the wear on the fork blades from striking or dragging on the floor or ground. See safety messages on next page.

Pull back on the lift control lever and raise the forks 150 to 200 mm (6 to 8 inch) above the floor.

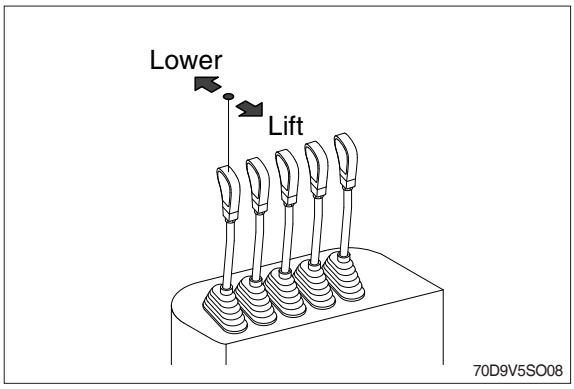

Then, using the tilt control, tilt the mast back slightly to raise the fork tips.
The mount of forward and backward tilt to be used is governed by the application.

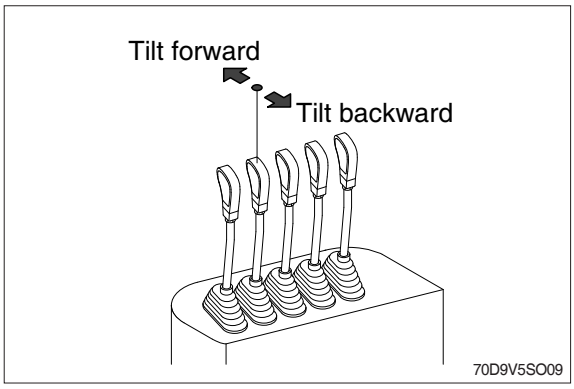

⚠ **When the mast (carriage and/or load) is raised into a high (Elevated) position, the stability of the truck is reduced.**
Some of the other conditions that may affect stability are ground and floor conditions, grade, speed, loading, dynamic and static forces, and the judgement exercised by the operator. Trucks equipped with attachments behave as partially loaded trucks even when operated without a load on the attachment. Also, improper operation, faulty maintenance, or poor housekeeping may contribute to a condition of instability.

⚠ **For stability, do not travel with the load or carriage in a highly elevated position. Travel with the lift mechanism raised only enough to clear the ground or obstacles.**

2) SELECTING DIRECTION OF TRAVEL

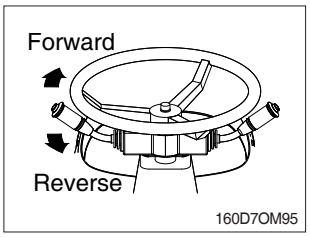

Push the gear selector lever forward, center it , or pull it back for FORWARD, NEUTRAL, or REVERSE, respectively.
Traction is disabled in NEUTRAL.

3) USING THE ACCELERATOR PEDAL

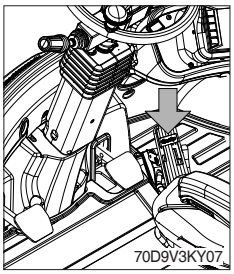

With the parking brake released and the gear selector lever in FORWARD or REVERSE, put your foot on the accelerator pedal and push down smoothly until the truck is moving at the desired speed.

4) BRAKING PEDAL

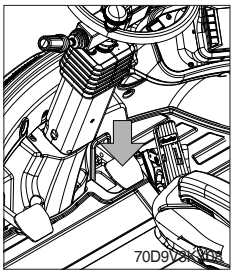

To stop the truck, lift your foot from the accelerator pedal and put it on the brake pedal. Push down on the brake pedal in a smooth, firm motion until the truck is stopped.

⚠ **Stop the lift truck as gradually as practical. Hard braking and wheel sliding are dangerous, increase wear, and can cause you to loose a load and damage to the lift truck. Can cause tip-over.**

5) INCHING PEDAL

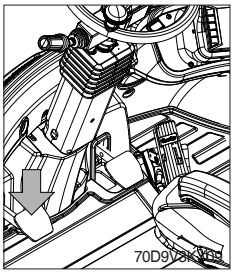

Use the inching pedal and the accelerator pedal in combination to vary lift and travel speeds independently. The further you depress the inching pedal, the more the driving clutch slips, reducing travel motion. With the inching pedal fully depressed, the brakes fully engage. You operate the inching pedal with your left foot for precise control of travel speed, while you operate the accelerator pedal together with the lift control to vary lift speed.

11. TRAVELING OF THE TRUCK

1) BASIC OPERATION

(1) Traveling posture

Lift the forks so that the forks are placed 15~ 20 cm (6~8 in) above the ground and tilt back the mast fully.

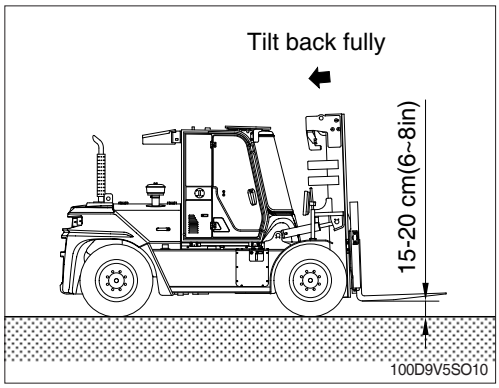

(2) Traveling operation

When warm-up operation is completed after the engine is started, move the truck according to the following procedures.

① Release the parking brake.

② Put the gear selector lever in the 1st stage of forward or backward direction and press gently the accelerator pedal to move the truck.

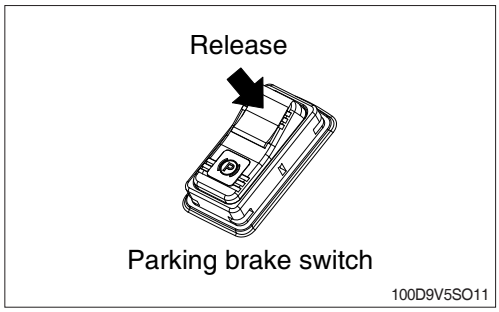

(3) Changing direction and speed

① The gear selector is designed for the mounting on the left side of the steering column.

② The positions (speeds) 1 to 3 are selected by a rotary motion, the driving direction Forward (F) - Neutral (N) - Reverse (R) by tilting the gear selector lever.

③ When doing work, run the truck in the 1st or 2nd speed.

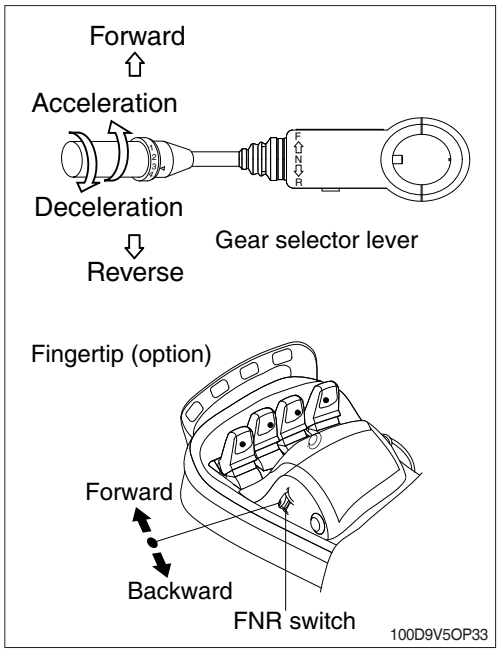

⚠ When traveling at high speed, do not abruptly decelerate by using the gear selector lever, to slow down instead press the brake pedal.

⚠ When changing direction, check beforehand there is no obstacle in the direction you will be headed.

⚠ Avoid changing direction at high speed.

(4) Turning the truck

① Turn the truck by moving the steering wheel into the desired direction.

② You can turn the truck to the left or right by 52 degree.

※ Do not turn the truck abruptly when traveling at high speed and avoid turn on a slope.

⚠ Steering does not function with engine OFF.

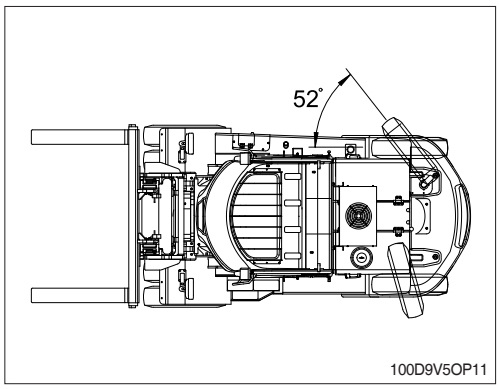

(5) Precautions when driving

① If the monitor warning lamp lights up, put the gear selector lever in the neutral position and stop the truck. Stop the engine after running it at low idling. Then resolve any problems regarding operation of the truck.

② When operating the truck, if the load is lighten rapidly, the speed of the truck will increase. So, be careful.

③ When the truck travels on uneven ground, keep the truck traveling at low speed.

(6) Stopping the truck

① Press the brake pedal to stop the truck.

② Put the gear selector lever in the neutral position.

③ Turn the parking brake switch ON.

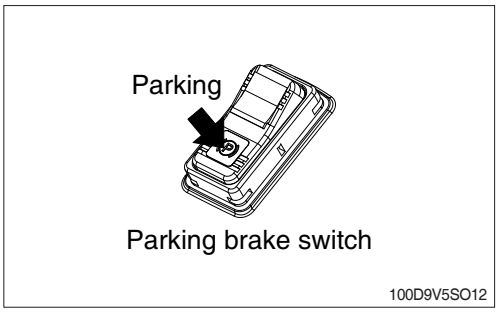

④ Lower the forks to the ground.

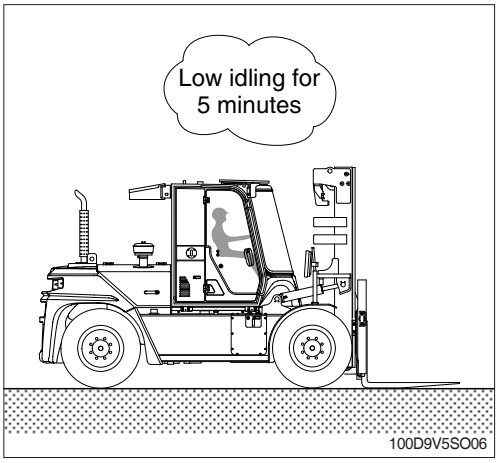

(7) Stopping engine

※ If the engine is abruptly stopped before it has cooled down, its service life may be shortened. Avoid sudden stop except an emergency.

※ When the engine is overheated, do not stop immediately. Run the engine at a mid range speed to allow it to cool down, then stop it.

① Check if the parking brake switch is in the lock (ON) position.

② Check if the gear selector lever is in the neutral position.

③ Run the engine at low speed without operating the equipment for about 5 minutes.
Turn the starting key to the OFF position and remove the key.

(8) Checks after the engine stopped

① Check the leakage of oil and water, the work equipment and the exterior of the truck.

② Refill the fuel tank.

③ Remove any debris inside of the engine room and attached to the truck.

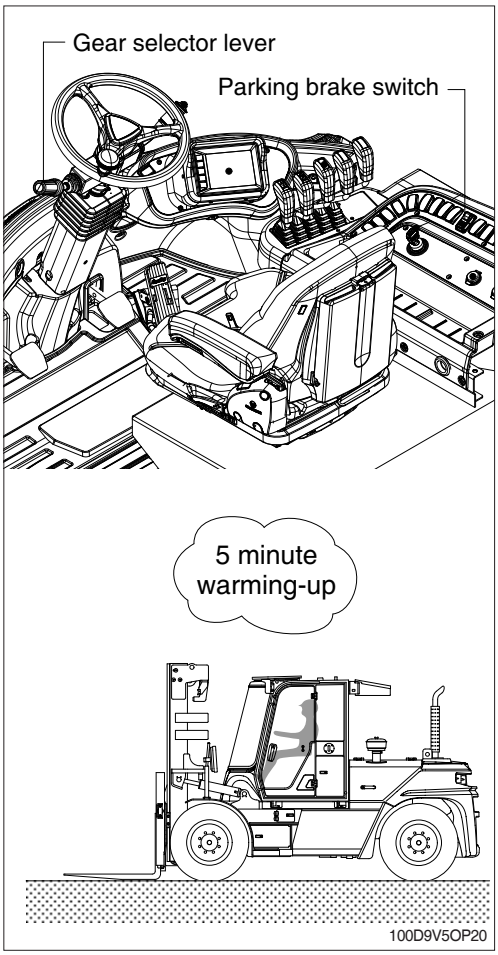

2) TRAVELING ON A SLOPE

(1) Never travel down a slope in neutral.

(2) Lower the forks 15-20 ㎝ (6~8 in) to the ground.

(3) Never turn on a slope, either loaded or unloaded.

(4) Never park on a slope.

(5) **Loaded** - move with **forks upgrade**
Unloaded - move with **forks downgrade**

※ **Truck cannot travel effectively on a slope when the oil temperature is low. Do the warming-up operation when it is going to travel on a slope.**

⚠ **Be careful when working on slopes. It may cause the truck to lose its balance and turn over.**

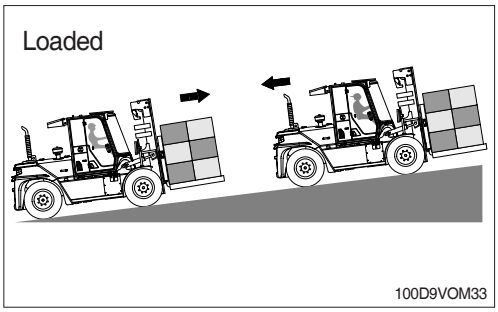

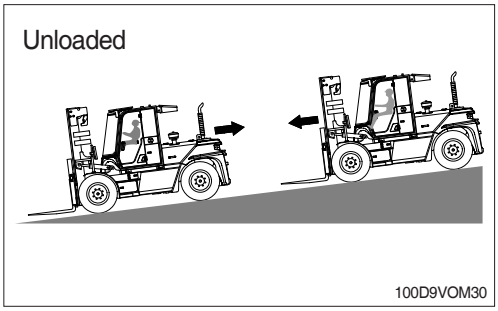

12. OPERATING SAFELY

Safe operation is the responsibility of the operator.

1) WATCH WHERE YOU ARE GOING. DON'T GO IF YOU CAN'T SEE...

(1) Before driving, check all around to be sure that your intended path of travel is clear of obstructions and pedestrians.

⚠ **LOOK WHERE YOU DRIVE. Watch out for pedestrians, other vehicles, obstructions (especially overhead), and drop-offs. If the load blocks your view, drive backwards, except up slopes.**

(2) Do not allow anyone to stand or pass under the load or raised forks.
Watch for people in your work area even if your truck has warning lights or alarms. They may not watch for you.

(3) Sound horn at intersections and wherever vision is obstructed.
Do not drive a truck up to anyone standing in front of an object.

2) PROTECT YOURSELF AND THOSE AROUND YOU...

(1) Operate the truck only from the designated operator's position. Stay within the confines of the lift truck profile dimensions. Keep all body parts inside the operator's compartment and away from the danger of passing obstructions. Keep inside the cabin.

※ A cabin is intended to offer protection to the operator from falling objects, but cannot protect against every possible impact. Therefore, it should not be considered a substitute for good judgement and care in loading, handling, storage, etc.

⚠ Keep clear of the mast and lift mechanism. NEVER reach into or put hands, arms, legs, or head into or through the mast structure or near the carriage or lift chains. Never put any part of your body between the mast and the truck.
Don't use the mast as a ladder.
Keep all other persons clear of the load and mast mechanism while attempting to handle a load.

3) NO RIDERS...

(1) Do not carry passengers. The operator is the only one who should be on the truck.

4) ALWAYS BE IN FULL CONTROL OF YOUR LIFT TRUCK...

(1) Never operate a lift truck or its attachments if you are not in the designated operator's position.

(2) Never operate a lift truck when your hands and feet are wet or greasy.

(3) Always pick the smoothest travel route for your lift truck. Avoid bumps, holes, slick, spots, and loose objects or debris in your path that may cause the truck to swerve or tip. If these conditions are unavoidable, slow down and carefully drive past them. Slow down for wet or slippery surfaces.

(4) Avoid any sudden movement, it can cause the truck to tip-over.
Start, stop, travel, steer, and brake smoothly.

(5) Operate your lift truck under all conditions at a speed that will permit it to be brought safely to a stop.

(6) Travel with the fork carriage tilted back and raised only enough to fully clear the ground or obstacles. When the carriage (load) is in an elevated position the stability of the truck is reduced.

(7) Do not elevate the load except during stacking.

5) GRADES, RAMPS, AND INCLINES...

(1) Use special care when operating on ramps, inclines, and uneven areas. Travel slowly. Travel straight up and down. Do not turn or drive at an angle across an incline or ramp. Do not attempt to operate on grades in excess of those specified and/or recommended by the manufacturer.

(2) When the truck is loaded, travel with the load upgrade. When the truck is empty, travel with lifting mechanism (mast) downgrade.

(3) Always brake with the right foot pedal(Not with the inching pedal) when travelling down incline.
If you should travel down incline for long distance, apply the engine brake with lower gear. Brake malfunction such as preformance drop, excessive wear of friction material and disc stick can be caused by continuous brake operation making the oil overheating. In that case, stop traveling, apply parking brake with neutral gear position and stay during 10 minutes with engine idle speed.

⚠ Do not travel down incline with neutral gear state.
It makes the brake oil overheated due to excessive brake operation.

6) PRACTICE SAFE OPERATION EVERY TIME YOU USE YOUR TRUCK...

(1) Careful driving and operation is your responsibility. Be completely familiar with all the safe driving and load handling techniques in this Operator's Manual. Use common sense. Drive carefully do not indulge in stunt driving or horseplay. Observe traffic rules. Watch for people and hazards. Slow down, be in full control of your lift truck at all times.

(2) Follow the instructions in this manual to avoid damage to your truck or the possibility of injury to yourself of others.

(3) During your work, observe all functions of your lift truck. This allows you to immediately recognize a problem or irregularity that could affect the safe operation of your truck.

(4) Periodically check the gauges and warning indicator lights in the cluster to be sure they indicate a normal condition. If an abnormal condition appears bring the truck to a safe condition and safe location, shut off the starting switch immediately and report the problem.

⚠ Do not continue to operate a truck that has a malfunction. Stop and have it fixed.

⚠ Always wear your seat belt when operating your truck.

13. LOAD HANDLING

1) GENERAL

Handle only loads that are within the truck rated capacity as shown on the nameplate. This rating specifies the maximum load that should be lifted. However, other factors such as special load handling attachments, load having a high center of gravity, or uneven terrain may dictate that the safe working load be less than the rated capacity. Under these conditions, the operator must reduce the load carried so that the lift truck remains stable.

Handle only stable or safely arranged loads. Do not handle loads made up of loose, unevenly stacked, or unstable items that can easily shift and fall. Take the time to stack correctly and handle loose items. Center the load on the forks.

Do not lift anything that might fall on the operator or a bystander. Do not handle loads that are higher than the fork carriage unless the load is secured so that no part of it can fall backward.

Keep the load back against the load backrest. Loads placed out on the ends of the forks can make the lift truck less stable and more likely to tip up.

Lift and lower with the mast vertical or tilted slightly back-never tilted forward.

Operate lift and tilt controls slowly and smoothly. Never tilt the mast forward when the carriage (load) is raised, except to pick up or deposit a load over a rack or stack.

⚠ **Slack chains mean rail or carriage hang-up. Raise the mast before you move. If the mast malfunctions in any way or becomes stuck in a raised position, operate the lift control to eliminate any slack chains by raising the carriage. DO NOT go under a raised mast or forks to attempt repairs.**
DO NOT climb the mast or the truck.

Remember your truck is designed to carry loads forward of the front wheels so that the weight of the load is counterbalanced by the weight of the truck.

The farther the load is carried from the pivot point (Center of front wheels), the less the weight on the steer wheels. Therefore, always carry the load as close to the front wheels as possible (Back and flush against the face of the forks.)

The capacity load shown on the nameplate is represented by a cube in weight is evenly distributed, with the center of gravity located a standard distance from the face of the forks. If the weight of the actual load to be handled is not evenly distributed, put the heaviest part closest to the carriage.

2) ADJUSTING THE LOAD FORKS

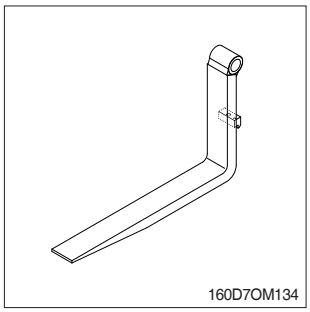

The load forks are adjustable on the hanger, carriage. Forks should be spaced as far apart as the load will allow. Both forks should always be the same distance from the center of the fork carriage. To adjust the forks, raise the carriage slightly. Tilt the mast fully forward to reduce friction and make the fork slide easier.
Unlock the fork locking pins.
Position the forks by pushing them away from you. Secure the fork locking pins.

3) LOAD ON FORKS

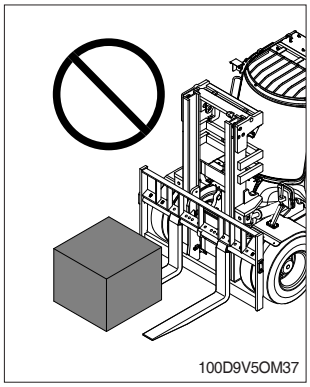

(1) Do not elevate the load with one fork.
Loading with one fork cause the tip over, serious injury or death of operator.
The work can cause the height difference between both fork tips.

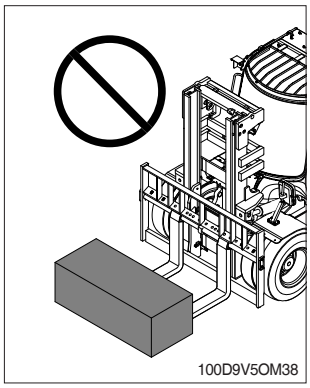

(2) Do not elevate the load with the ends of the forks.
This work can cause the height difference tips due to overload in the end of the forks.
The load should be loaded at least over 2/3 of fork length.

4) TRAVELING WITH LOAD

Travel with load or carriage as low as possible and tilted back. Never travel with the load or carriage raised (elevated) in a high position. Do not elevate the load except during stacking.

Observe all traffic regulations and watch for other traffic, pedestrians, and safe clearances. Always look in the direction of travel. Keep a clear view of the path of travel and when the load blocks your visibility, travel in reverse with load trailing (Except when climbing an incline).

Avoid sudden movements when carrying a load-start, stop, travel, steer, and brake smoothly. Steer clear of bumps, holes, and loose materials or debris on the ground. Lift and tilt slowly and smoothly. Go slowly when turning. Cross railroad tracks slowly and at an angle wherever possible.

Use special care when handling and traveling with long, high, or wide loads-to avoid losing the load, striking bystanders or obstructions, or tipping the truck.

Watch clearances around the truck and load as you travel. Raise the forks or attachment only to pick up or stack a load. Look out for obstructions, especially overhead.

Be aware that exaggerated tail swing, when turning while traveling forward, is a characteristic of lift trucks that are steered by the rear wheels. Accordingly, you need to become accustomed to tail swing and always check the tail swing area of the counterweight to be sure it is clear before you turn.

Always be concerned about the stability of your lift truck. When attachments are used, extra care should be taken in securing, manipulating, positioning, and transporting the load. Because attachments generally add extra weight and complexity to the truck, operate trucks equipped with attachments as partially-loaded trucks when not handling load.

5) PICKING UP AND MOVING LOADS

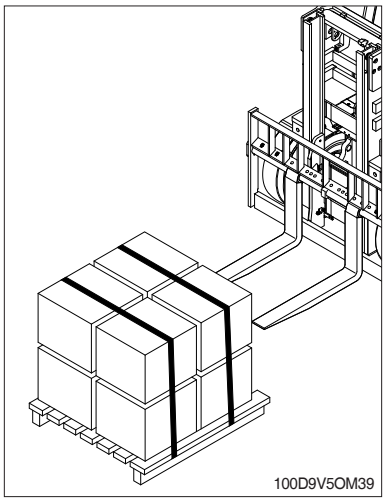

When picking up a load from the ground, approach the load slowly and carefully align the truck square with the load. The forks should be adjusted to fit the load or pallet being handle and spread as wide as possible to provide good stability and balance. Before lifting, be sure the load is centered and the forks are fully under and supporting the load. Fork length should be at least 2/3 of load length. With the lift and tilt controls, adjust the forks to the correct height and angle for freely engaging the load pallet. Move forward until the forks are squarely and completely under the load.

⚠ Be sure that the forks do not extend beyond the load, causing damage or tipping of other adjacent loads or materials behind the load being moved.

If the forks are longer than the load, move the tips partially under the load without extending beyond the load. Raise the load to clear the ground. Back out several inches, or whatever distance is necessary, then set the load down and move forward until the load is positioned against the carriage.

Raise the load from the ground or stack by tilting the mast back just enough to lift the load from the surface. When stacking or tiering, use only enough backward tilt to stabilize the load.

Then raise the load to traveling height and tilt fully back to travel (Except for loads that must be transported as level as possible).

6) UNLOADING

To deposit a load on the floor after being moved into the correct position, tilt the mast forward to a vertical position and lower the load.

Adjust the fork height and tilt the mast forward slightly, as necessary, for smooth removal of the forks from the load (Pallet).

Carefully back away to clear the forks from the load.

Raise the forks to traveling height and tilt forks to a level position 150~200 mm (6~8 in) off the floor.

7) STACKING

(1) To put a load on a stack

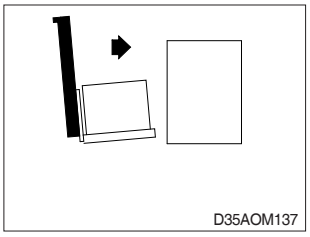

① Aproach slowly and align the lift truck and load squarely with the stack.

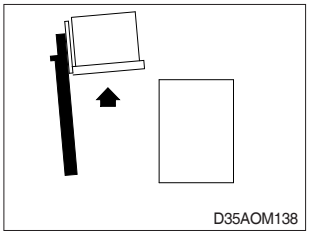

② Raise the load as the lift truck nears the stack.

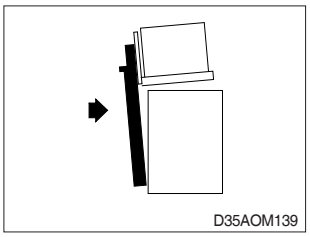

③ Move forward slowly until the load almost touches the stack. The leading edge and sides of the load pallet should line up exactly with the near edge and side of the load or rack on which you are stacking.

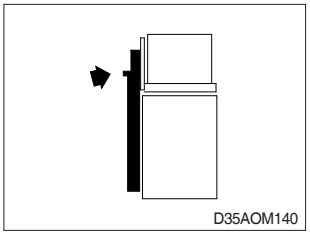

④ Stop close to the stack and further lift the load high enough to clear the top of the stack. Slowly move the load into position. Use care not to damage or move adjacent loads.

⑤ When the load is aligned with the stack beneath it, tilt the mast to the vertical position and carefully lower the load onto the top of the stack.

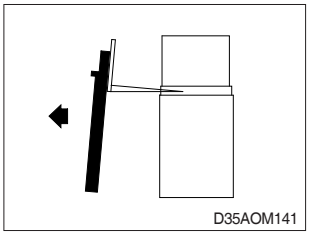

⑥ Lower the forks slightly to clear the load pallet. Tilt the forks forward slightly, if necessary.

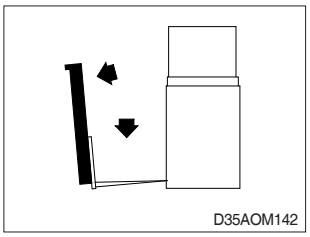

⑦ Check your travel path, then carefully back away until the forks are clear of the stack. Stop and lower the forks to the travel position [150~200 mm (6~8 in) above the ground], then tilt back for travel.

(2) To move a load from a stack

Approach the stack carefully, truck lined up squarely with the load. With mast vertical, raise the forks to the correct height for freely engaging the load pallet. Adjust fork angle as necessary to fit squarely under the load. Move (inch) forward until the forks are under the load.

Be sure that the forks do not extend beyond the load, causing damage or tipping of other adjacent loads or materials behind the load being moved. If the forks are longer than the load, move the tips partially under the load without extending beyond the load.
Raise the load to clear the under surface. Back out several inches, then set the load down and move forward until the front face of the forks contacts the load. Be careful that the fork tips now clear the adjacent load or material behind the load being moved.

Raise the load from the stack by tilting the mast back just enough to lift the load from the surface. Or, with the mast still vertical, raise the forks until they begin to lift the load. At this point, apply the minimum back tilt that will stabilize the load.

Check your travel path, slowly back up until clear of the stack, stop, and then lower the load to the travel position [150~200 mm (6~8 in) off the ground]. Tilt full back to travel (Except for certain loads that may have to be transported as level as possible). Be sure the load is back flush against the carriage or front face of the forks.

※ Certain loads must be transported as level as possible.

14. SHUT DOWN PROCEDURE

※ **Always leave your lift truck in a safe condition.**

1) WHEN YOU LEAVE YOUR TRUCK, OR PARK IT, FOLLOW THESE SAFETY RULES

(1) Park in a safe area away from normal traffic.
(2) Never park on a grade or a slope.
(3) Never park in areas that block emergency routes or equipment, access to fire aisles, or stairways and fire equipment.

2) BEFORE LEAVING THE OPERATOR'S POSITION

(1) Bring the truck to a complete stop.
(2) Put the gear selector lever in the NEUTRAL position.
(3) Set the parking brake switch the ON (LOCK) position.
(4) Lower the lifting mechanism-carriage and forks or attachment fully to the ground.

3) IN ADDITION, WHEN LEAVING THE TRUCK UNATTENDED

(1) Tilt the mast forward until the forks are level and flat on the ground. Let the engine run at idle speed.
(2) Turn the starting switch to the OFF position and remove the key.
(3) Block the wheels, if the truck must be left on an incline or you have any doubt about the truck moving from a safe position.

※ **If the lift truck has been working hard, let the engine idle a few minutes before shutting it off.**

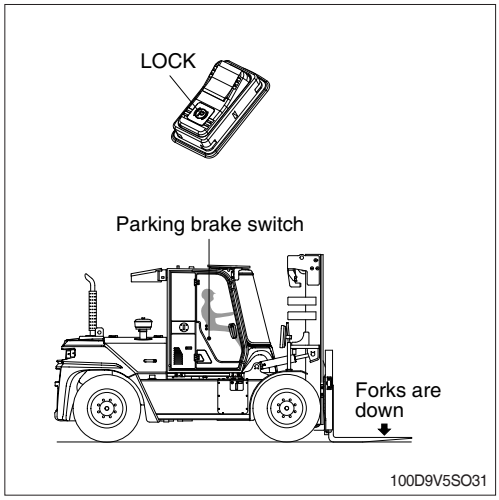

⚠ **CAUTION FOR TURBOCHARGER PROTECTION**
In order to prevent turbocharger failure, please let the engine idle for more than 5 minutes before shutting it off.

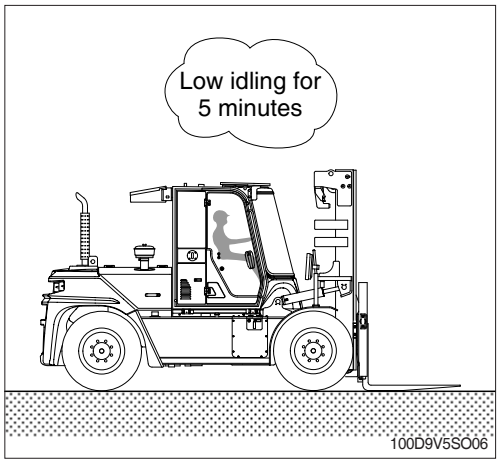

15. STORAGE

1) BEFORE STORAGE

When you keep your forklift truck in storage for an extended period of time, observe the following safeguard instructions:

(1) Wash and tidy the truck and house it in a dry building.

(2) When the truck has to be placed outdoors, park it on a even ground and cover it securely with canvas.

(3) Give enough fuel, grease, lubricant and oil.

(4) Coat exposed piston rods of all hydraulic cylinders fully with grease.

(5) Cover batteries after removing terminals, or remove battery from the truck and store separately.

(6) When the atmospheric temperature is anticipated to drop below 0˚C, add antifreeze. (Refer to page 7-58 about ratio of water and antifreeze.)

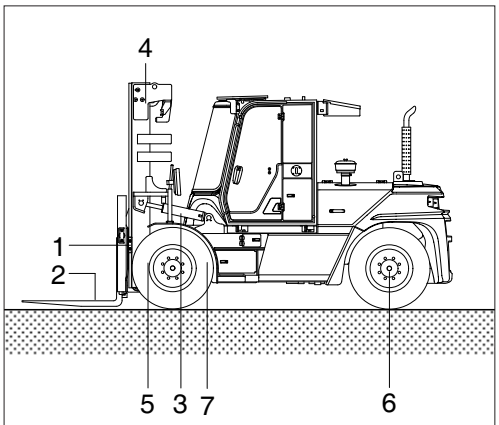

1 Fork adjust cylinder (2EA)
2 Fork (2EA)
3 Tilt cylinder (Left/Right, 2EA)
4 Lift chain (2EA)
5 Mast support (Left/Right, 2EA)
6 Steering axle (6EA)
7 Drive shaft spline (3EA)

100D9V5SO13

2) DURING STORAGE

(1) Operate the engine and move the truck for a short distance once a month so that a new oil film will be coated over movable parts and component surfaces. Remove and storage the battery at the same time.

⚠ The above operations should be performed in the open. If they have to be performed inside a building, open the windows and doors to improve ventilation.
This is to avoid the danger of gas poisoning.

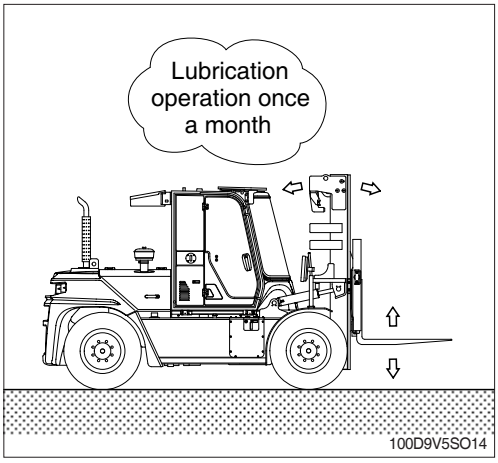

100D9V5SO14

※ BATTERY

① Once a month, start the engine for 15 minutes (or use a charger) to charge the battery.
② Every 2 months, check the battery voltage and keep battery voltage over 25.08V.
③ If the machine stock period is over 6 months, disconnect the battery negative (-) terminal.

3) AFTER STORAGE

After storage (When it is kept without cover or the rust-preventive operation once a month is not carried out), you should apply the following treatment before operation.

(1) Remove the drain plugs from the oil pan and other cases and drain any water.

(2) Remove the rocker housing cover and lubricate the valves and rocker arms well. Inspect the valve operation.

(3) After the engine is started, run it at idling speed until it is warmed up completely.

16. TRANSPORT

1) PRECAUTIONS FOR LOADING AND UNLOADING

Contact your HYUNDAI forklift distributor for advice regarding transportation of the truck.

When loading or unloading the truck on or from a transporter, using loading ramp, the following precautions must always be observed.

⚠ Check travel route for overpass clearance.

Make sure there is adequate clearance if the lift truck being transported is equipped with a high mast or cab.

Remove ice, snow or other slippy material from the shipping lift truck and the loading dock.

(1) Ensure that the transporter cannot move by applying the brake and putting blocks under the wheels. Put the gear selector lever in the NEUTRAL position.

(2) Fix the loading ramps securely so that the centers of the transporter and truck are aligned. (The loading ramps should be of sufficient width, length and thickness to permit safe loading or unloading.)

(3) After checking that the truck is aligned with the loading ramps, back the truck slowly up the ramps to load it on the transporter.

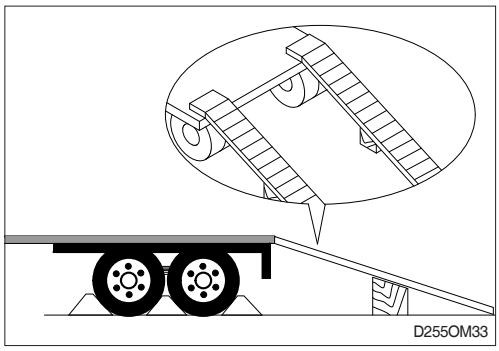

⚠ When on the loading ramps, never change direction. If it is necessary to change direction, drive off the ramp and realign the truck.

Block the wheels and secure the lift truck with tiedowns.

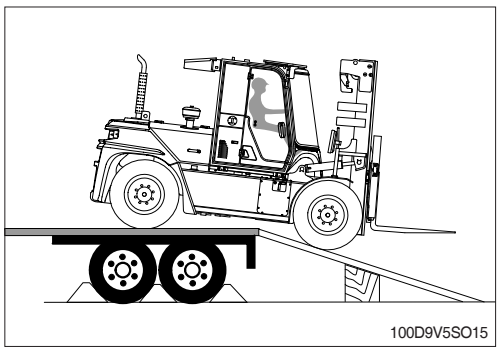

17. LOADING AND UNLOADING BY CRANE

1) Check the specification of the truck when you are going to hoist the truck.
2) Use long wire rope and stay to keep the distance with the machine as it should avoid touching with the truck body.
3) Put a rubber plate or special stay where contact with the truck's body to prevent damage.
4) Place crane on the proper place.
5) Install the wire rope and stay like the illustration.

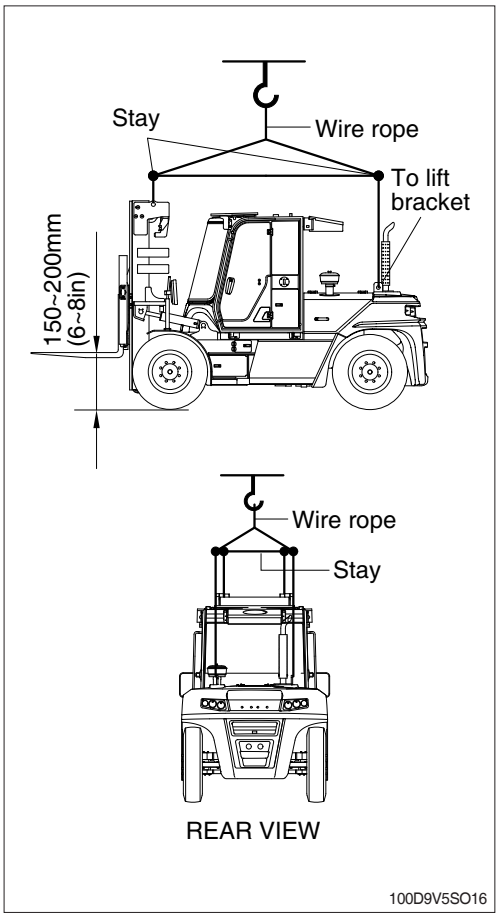

⚠ Make sure wire rope is proper size.
⚠ Make sure that the truck is shut down before hoisting. Lifting the truck with engine running can cause serious accident.
⚠ The wrong hoisting method or installation of wire rope can cause damage to driver and truck.
⚠ Do not load abruptly.
⚠ Keep area clear of personnel.
⚠ Recommend to manufacture the stays separately as per lifting conditions.
⚠ Before and after loading, perform a basic inspection. Check the torque and clearance of the mast and major parts.

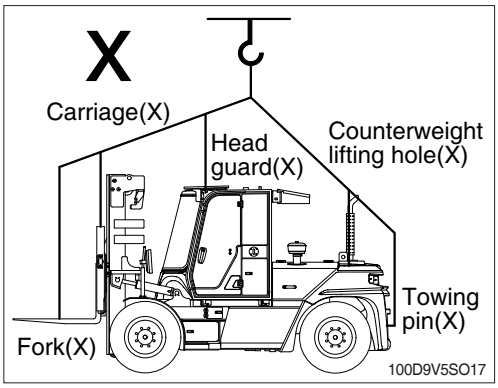

⚠ Do not install the wire to unsafe position such as forks, carriage, head guard, counterweight lifting hole or towing pin, etc.. It can cause serious injury or damage to driver and truck.

⚠ If there is any problem to lift a truck, please contact your dealer.

⚠ Perform the lifting service with skilled service men.

1. HOW TO TOW A DISABLED TRUCK

If your lift truck becomes disabled but it can be moved freely on its own wheels without further damage, use the following procedures to tow it safely to a repair area.

△ **It is important for your safety and the care of your lift truck to use the proper equipment and carefully follow these recommendations for safe towing.**

⚠ **DO NOT tow a lift truck if there is a problem with the brakes or tires or the steering cannot be operated. DO NOT tow up or down ramps and steep inclines. DO NOT attempt to tow a lift truck if traction or weather conditions are poor.**

1) Be sure to apply the parking brake or block the drive wheels on the disabled truck while working around it.

2) When possible, raise the carriage (forks) on the disabled truck about 300 mm (12 in) from the floor or ground. Secure the carriage with a chain.

3) Obtain another lift truck of equal or larger size carrying a partial load for traction.

4) Check that the counterweight bolts are in place and properly torqued. (This bolt is made of a special high tensile steel and is not commercially available. Replace it, when necessary, only with a genuine HYUNDAI replacement part).

5) Use an approved, solid metal tow bar with towing couplers that connect to the towing pins in the counterweights.

6) Release the parking brake on the towed truck.

7) Put the gear selector lever in the NEUTRAL position.

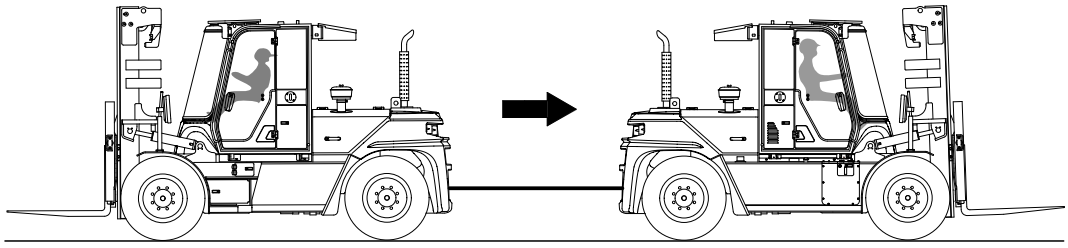

100D9V6EP01

8) Tow the disabled truck backward. An operator must be on the towed truck.

   Tow the truck slowly. Careful towing is necessary to prevent injury to personnel or damage to the truck. The truck should be towed at a speed of less than 8 km/h (5 mph) with a driver in the seat. Do not lift the truck or any wheels off the floor or ground while the truck is being towed.

⚠ **The power steering will not operate on the disabled truck when the engine is not running.**

9) Park the disabled truck in authorized areas only. Fully lower the forks to the floor, put the gear selector lever in the NEUTRAL position and turn the staring switch to the OFF position. Set the parking brake switch the ON (LOCK) position. Remove the key and, when necessary, block the wheels to prevent the truck from rolling.

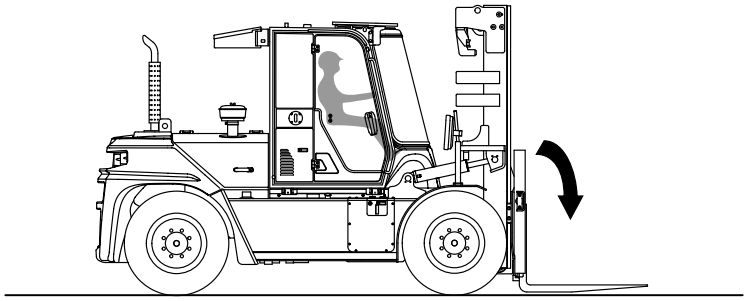

100D9VOM43

⚠ **Always engage the parking brake when parking a lift truck. The truck can move and cause injury or death to personnel near it.**

2. PARKING BRAKE RELEASE

Parking brake is operated by the spring force and released by hydraulic pressure.
If the engine or transmission does not operate, the parking brake will be operated to stop the truck.
For an emergency, the parking brake can be released as below.

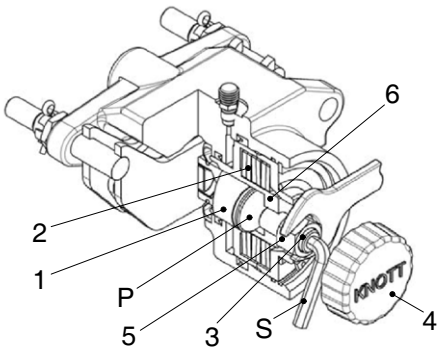

100D7BS117

1	Thrust bolt	4	Screw cap	P	Even surface
2	Bank of cup springs	5	Lock nut	S	Socket wrench
3	Adjusting screw	6	Piston		

1) The truck has to be secured against rolling away.
2) Release the screw cap (4) and unscrew
3) Release the lock nut (5) with a spanner size 24 or 30 and turn the adjusting screw (3) with socket wrench size 8 or 10 manually counter-clockwise until the brake disc is free.

⚠ **For the emergency release is an actuation torque of 40 Nm respectively 70 Nm required.**

4) Mount the lock nut (5) and the screw cap (4) and tighten both as far as possible manually. (protection against dirt)

⚠ **Now, the truck do not have any brake function. The truck must be secured against moving away with proper means. Before putting the truck into operation again, the brake has to be adjusted again. Refer to the service manual.**

3. HOW TO USE BATTERY JUMPER CABLES

If your lift truck battery is discharged (dead), you can start your lift truck by jumping it from another lift truck that has a 12 V negative-ground electrical system. The "Booster" battery must be fully charged and in good condition. This section explains how to perform this procedure safely. To avoid damage to your lift truck and your battery or the possibility of harm to yourself, follow the instructions and warnings carefully. If you have any doubts, ask for help from an experienced mechanic.

If your truck has a battery with terminals on the side you will need a set of jumper cables with matching connector clamps or cable adapters for side mounted battery terminals.

△ **Use only a 12 V NEGATIVE GROUND SYSTEM to jump your truck. You can injure yourself and permanetaly damage your truck's 12 V starting motor and ignition system by connecting it to a 12 V power supply or to a positive ground system.**

⚠ **BATTERIES CONTAIN SULFURIC ACID. Avoid acid contact with skin, eyes, or clothing. If acid contacts your eyes or skin, flush immediately with water and get medical assistance. Wear safety glasses when working near the battery to protect against possible splashing of the acid solution.**

If the discharged battery has filler caps, check the fluid level. Do not use an open flame to check and do not smoke. If low, add distilled water to the correct level. Be sure to install the caps before jump starting.

Do not jump start, charge, or test a sealed type battery if the test indicator looks illuminated or has a bright color. Install a new battery.

⚠ **BATTERIES EMIT EXPLOSIVE GAS. Do not smoke or have open flames or sparks in battery charging areas or near batteries. An explosion can result and cause injury or death.**
Hydrogen gas is produced during normal battery operation.
Hydrogen can explode if flames, sparks, or lighted tobacco are brought near the battery. When charging or using a battery in an enclosed space, always provide ventilation and shield your eyes. Wear safety glasses when working around batteries.

3) Put the truck with the booster battery as near to the other truck as necessary for the jumper cables to reach both batteries. Check and make sure that the trucks do not touch each other. Use particular care when connecting a booster battery to prevent sparks.

4) On both trucks:
   ① Apply the parking brake.
   ② Put the gear selector lever in the NEUTRAL position.
   ③ Turn the starting switch to the OFF position.
   ④ Turn all accessories to the OFF position and leave them off until after the engine has been started and the jumper cables have been removed.

⚠ **To avoid short circuits, remove all jewelry and do not permit any metal tools to make contact between the positive battery terminal and other metal on the truck. When you connect jumper cable clamps to the positive terminals of the two batteries, make sure that neither clamp contacts any other metal. Injury can occur from electrical shock or explosion.**

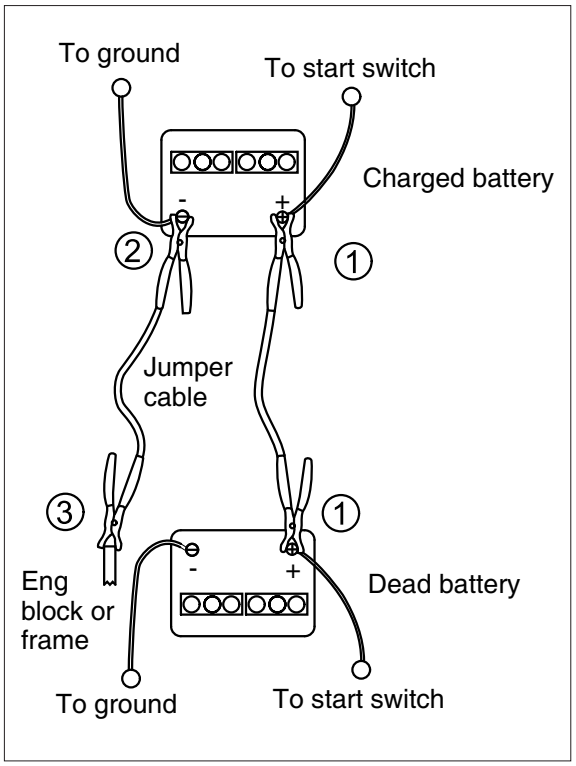

5) Connect the jumper cables in the following sequence:
   ⓐ Connect a jumper cable from the positive (+; red) terminal on one battery to the positive (+; red) terminal on the other battery. Never connect positive (+; red) to negative (-; black), or negative to positive.
   ⓑ Connect one end of the second cable to the grounded negative (-; black) terminal of the jumper vehicle battery.
   ⓒ Connect the other end of the second cable to a stationary, solid metallic point on the engine of the stalled vehicle, not to the negative (-; black) terminal of its battery. Make this connection at a point at least 450 mm (18 in) away from the battery, if possible. Do not connect it to pulleys, fans or other parts that move. Do not touch hot manifolds that can cause sever burns.
6) Start the engine on the jumper vehicle and run the engine at a moderate speed for a minimum of five minutes.
7) Start the engine on the stalled vehicle. Follow the starting instructions in section 5, Starting and Operating Procedures in this manual. Be sure that the engine is at idle speed before disconnecting the jumper cables.
8) Remove the jumper cables by reversing the installation sequence exactly. Start by removing the last jumper cable from the stalled vehicle first. Remove the cable end from the engine block first, then the other end of the negative (-; black) cable.
9) Remove both ends of the positive (+; red) cable.

4. EMERGENCY FORK LOWERING

In case that the mast can not be lowered due to a problem in the controller, activate the emergency lowering valve on the MCV assembly by rotating the valve (a).

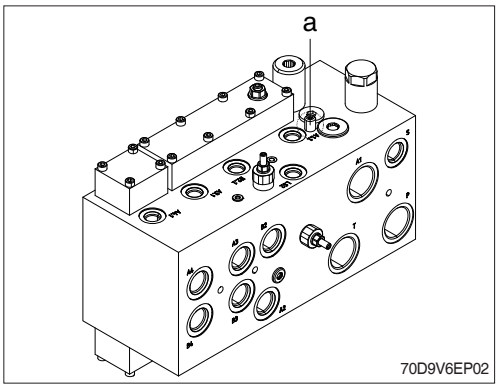

⚠ **Manual override features are intended for emergency use, not for continuous-duty operation.**

1) Rasing the cabin.

2) Use the L-wrench (3 mm) to slowly undo the screw for the emergency lowering feature in an anti-clockwise direction until lowering begins.

※ **Do not undo the screw more than 1.5 turns.**

※ **If lowering still does not begin, there is a mechanical block. Do not under any circumstances continue to unscrew the emergency lowering feature.**

3) After lowering is complete, the screw must be screwed back in again

※ **Screw locking is essential to prevent fork lifting (or lowering) slow (or malfunction) due to valve opening.**

※ **Do not exceed a tightening torque of maximum 0.25 ~ 0.3 kgf·m (1.8 ~ 2.2 lbf·ft).**

⚠ **When operating the emergency lowering valve in order to lower the mast inevitably, always make certain that any person should not stand or pass under the mast, the fork and platform so as to avoid from unexpected accident such as severe personal injury or death.**

5. KEY-LOWERING INTERLOCK

When the engine is stopped and the start key is in the 'OFF' position, the fork does not lower when the lift lever is pushed forward. However, sitting on the seat, placing the engine start key in the 'ON' position and pushing the lift lever forward allows the fork to be lowered even if the engine stops.

※ **When the fork will not lower due to system malfunction or other reasons, it can be lowered by loosening the emergency lowering valve. (refer to page 6-6 for details.)**

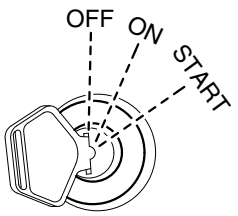

Start switch

35D9SOM10

7. PLANNED MAINTENANCE AND LUBRICATION

1. INTRODUCTION

ONLY TRAINED AND AUTHORIZED PERSONNEL should perform planned maintenance. Local HYUNDAI dealers are prepared to help customers put in place a planned maintenance program for checking and maintaining their lift trucks according to applicable safety regulations.

⚠ Powered industrial trucks may becomes hazardous if maintenance is neglected.

As outlined in section 4, **operator maintenance and care**, the operator should make a safety inspection of the lift truck before operating it. The purpose of this daily examination is to check for any obvious damage and maintenance problems, and to have minor adjustments and repairs made to correct any unsafe condition.

In addition to the operator's daily inspection, HYUNDAI recommends that the owner set up and follow a periodic planned maintenance (PM) and inspection program. The **PM** identifies needed adjustments, repairs, or replacements so they can be made before failure occurs. The specific schedule (frequency) for the PM inspections depend on the particular application and lift truck usage.

This section recommends typical planned maintenance and lubrication schedules for items essential to the safety, life, and performance of the truck. It also outlines safe maintenance practices and gives brief procedures for inspections, operational checks, cleaning, lubrication, and minor adjustments.

Specifications for selected components, fuel, lubricants, critical bolt torques, refill capacities, and settings for the truck are found in section 8.

If you need for more information on the care and repair of your truck, see your HYUNDAI dealer.

2. SAFE MAINTENANCE PRACTICES

The following instructions have been prepared from current industry and government safety standards applicable to industrial truck operation and maintenance. These recommended procedures specify conditions, methods, and accepted practices that aid in the safe maintenance of industrial trucks. They are listed here for the reference and safety of all workers during maintenance operations. Carefully read and understand these instructions and the specific maintenance procedures before attempting to do any repair work. When in doubt of any maintenance procedure, please contact your local HYUNDAI dealer.

1) Powered industrial trucks can become hazardous if maintenance is neglected. Therefore, suitable maintenance facilities and trained personnel and procedures shall be provided.

2) Maintenance and inspection of all powered industrial trucks shall be performed in conformance with the manufacturer's recommendations.

3) Follow a scheduled planned maintenance, lubrication, and inspection system.

4) Only trained and authorized personnel are permitted to maintain, repair, adjust, and inspect industrial trucks and must do so in accordance with the manufacturer's specifications.

5) Always wear safety glasses. Wear a safety (hard) hat in industrial plants and in special work areas where protection is necessary and required.

6) Properly ventilate work area, vent exhaust fumes, and keep shop clean and floors dry.

7) Avoid fire hazards and have fire protection equipment present in the work area. Do not use an open flame to check for level or leakage fuel, electrolyte, or coolant. Do not use open pans of fuel or flammable cleaning fluids for cleaning parts.

8) Before starting work on truck.

(1) Raise drive wheels free of floor and use oak blocks or other positive truck positioning devices.

(2) Remove all jewelry(watches, rings, bracelets, etc.).

(3) Put oak blocks under the load engaging means, inner masts, or chassis before working on them.

(4) Disconnect the battery ground cable (-) before working on the electrical system.

※ **Refer to the jacking and blocking section in the service manual for proper procedures.**

9) Operation of the truck to check performance must be conducted in an authorized, safe, clear area.

10) Before starting to operate the truck.

(1) Be seated in a safe operating position and fasten your seat belt.

(2) Make sure parking brake is applied.

(3) Put the gear selector lever in NEUTRAL position.

(4) Start the engine.

(5) Check functioning of lift and tilt systems, direction and speed controls, steering, brakes, warning devices, and load handling attachments.

11) Before leaving the truck.

(1) Stop the truck.

(2) Fully lower the load-engaging means: mast, carriage, forks or attachments.

(3) Put the gear selector lever in NEUTRAL position.

(4) Apply the parking brake.

(5) Stop the engine.

(6) Turn the start switch to the OFF position.

(7) Put blocks at the wheels if the truck must be left on an incline.

12) Brakes, steering mechanisms, control mechanisms, warning devices, lights, governors, lift overload devices, lift and tilt mechanisms, articulating axle stops, load backrest, cab and frame members must be carefully and regularly inspected and maintained in a safe operating condition.

13) Special trucks or devices designed and approved for hazardous area operation must receive special attention to insure that maintenance preserves the original approved safe operating features.

14) Fuel systems must be checked for leaks and condition of parts. Extra special consideration must be given in the case of a leak in the fuel system. Action must be taken to prevent the use of the truck until the leak has been corrected.

15) All hydraulic systems must be regularly inspected and maintained in conformance with good practice. Tilt and lift cylinders, valves, and other parts must be checked to assure that drift or leakage has not developed to the extent that it would create a hazard.

16) When working on the hydraulic system, be sure the engine is turned off, mast is in the fully-lowered position, and hydraulic pressure is relieved in hoses and tubing.

⚠ Always put oak blocks under the carriage and mast rails when it is necessary to work with the mast in an elevated position.

17) The truck manufacturer's capacity, operation, and maintenance instruction plates, tags, or decals must be maintained in legible condition.

18) Batteries, limit switches, protective devices, electrical conductors, and connections must be maintained in conformance with good practice. Special attention must be paid to the condition of electrical insulation.

19) To avoid injury to personnel or damage to the equipment, consult the manufacturer's procedures in replacing contacts on any battery connection.

20) Industrial trucks must be kept in a clean condition to minimize fire hazards and help in detection of loose or defective parts.

21) Modifications and additions that affect capacity and safe truck operation must not be done without the manufacturer's prior written approval. This is an OSHA requirement.
Capacity, operation, and maintenance instruction plates, tags, or decals must be changed accordingly.

22) Care must be taken to assure that all replacement parts, including tires, are interchangeable with the original parts and of a quality at least equal to that provided in the original equipment. Parts, including tires, are to be installed per the manufacturer's procedures. Always use genuine HYUNDAI or HYUNDAI-approved parts.

23) When removing tires follow industry safety practices. Most importantly, deflate pneumatic tires completely prior to removal. Following assembly of tires on multi-piece rims, use a safety cage or restraining device while inflating.

24) Use special care when removing heavy components, such as counterweight, mast, etc.. Be sure that lifting and handling equipment is of the correct capacity and in good condition.

3. INSTRUCTIONS BEFORE MAINTENANCE

1) INTERVAL OF MAINTENANCE

(1) You may inspect and service the truck by the period as described at based on service meter of LCD.

(2) Shorten the interval of inspect and service depending on site condition.(Such as dusty area, quarry, sea shore and etc.)

(3) Practice the entire related details at the same time when the service interval is doubled.
For example, in case of 250 hours, carry out all the maintenance each 250 hours, each 100 hours and daily sevice at the same time.

70D9V3KY180

※ Time intervals between maintenance are largely determined by operating conditions. For example, operation in sandy, dusty locations requires shorter maintenance intervals than operation in clean ware-houses. The indicated intervals are intended for normal operation. The operating condition classifications are ;

① **Normal operation**
Eight hour material handling, mostly in buildings or in clean, open air on clean paved surfaces.

② **Harsh operation**

a. All harsh working environment

b. Long term heavy load operation

c. High and low temperature working environment

d. Sudden change in temperature

e. Dusty or sandy working environment

f. Highly corrosive chemical working environment

g. Damp working environment

If the lift truck is used in severe or extreme operating conditions, you must shorten the maintenance intervals accordingly.

※ **Since the operating environment of lift trucks varies widely, the above descriptions are highly generalized and should be applied as actual conditions dictate.**

2) PRECAUTION

(1) Start maintenance after you have the full knowledge of truck.

(2) The monitor installed on this truck does not entirely guarantee the condition of the truck.
Daily inspection should be performed according to maintenance.

(3) Engine and hydraulic components have been preset in the factory.
Do not allow unauthorized personnel to reset them.

(4) Ask to your local dealer or Hyundai for maintenance advise it unknown.

(5) Drain the used oil and coolant in a container and handle according to the method of handling for industrial waste to meet with regulations of each province or country.

3) PROPER MAINTENANCE

(1) Replace and repair of parts
It is required to replace the wearable and consumable parts such as hose, tube and filter etc., regularly. Replaced damaged or worn parts at proper time to keep the performance of truck.

(2) Use genuine parts.

(3) Use the recommended oil.

(4) Remove the dust or water around the inlet of oil tank before supplying oil.

(5) Drain oil when the temperature of oil is warm.

(6) Do not repair anything while operating the engine.

(7) Stop the engine when you fill the oil.

(8) Relieve hydraulic system of the pressure by opening of breather when repairing the hydraulic system.

(9) Confirm if the cluster is in the normal condition after completion of service.

(10) For more detail information of maintenance, please contact local Hyundai dealer.

※ **Be sure to start the maintenance after fully understanding the section 1, safety hints.**

4) PRECAUTION WHEN INSTALLING HYDRAULIC HOSES OR PIPE.

(1) Be particularly careful that joint of hose, pipe and functioning item are not damaged.
Avoid contamination.

(2) Assemble after cleaning the hose, pipe and joint of function item.

(3) Use Hyundai genuine parts.

(4) Do not assemble the hose in the condition of twisted or sharp radius.

(5) Keep the specified tighten torque.

5) PERIODICAL REPLACEMENT OF SAFETY PARTS

(1) These are the parts which the operator cannot judge the remained lifetime of them by visual inspection.

(2) Repair or replace if an abnormality of these parts is found even before the recommended replacement interval.

※ **Replacement of consumable service parts is not covered under warranty.**

No.	Periodical replacement of safety parts	Interval
1	Lift cylinder hose	Every 1 years (harsh operation) Every 2 years (normal operation)
2	Tilt cylinder hose	
3	Side shift cylinder hose	
4	Brake hose	
5	Hydraulic pump hose	Every 2 years
6	Power steering hose	
7	Coolant hose and clamps	
8	Fuel hose	Every 2 years (harsh operation) Every 4 years (normal operation)
9	Packing, seal, and O-ring of steering cylinder	
10	Lift chain	
11	Hydraulic pump seal kit	Every 3 years
12	Pressure sensor	Every 5 years
13	Mast accmulator (piston type)	Every 10 years

※ **Replace the O-ring and gasket at the same time when replacing the hose.**

※ **Replace clamp at the same time if the hose clamp is cracked when checking and replacing hose.**

※ **Refer to page 7-5 about the harsh and normal operation.**

6) EMISSION-RELATED COMPONENTS WARRANTY (USA AND CANADA ONLY)

Hyundai shall have obligation under the EPA (Environmental Protection Agency) regulation of warranty about Emission-related components. This warranty shall exist for 3,000 hours or five years, whichever occurs first.

Naturally, this warranty does not cover to damage arising from accident, misuse or negligence, use of non-Hyundai parts, or from alterations not authorized by Hyundai.

※ **Emission-related components according to the EPA regulation.**

1. Air-induction system.
2. Fuel system.
3. Ignition system.
4. Exhaust gas recirculation systems.
5. After treatment devices.
6. Crankcase ventilation valves.
7. Sensors.
8. Electronic control units.

4. PLANNED MAINTENANCE INTERVALS

1) MAJOR COMPONENTS LOCATION

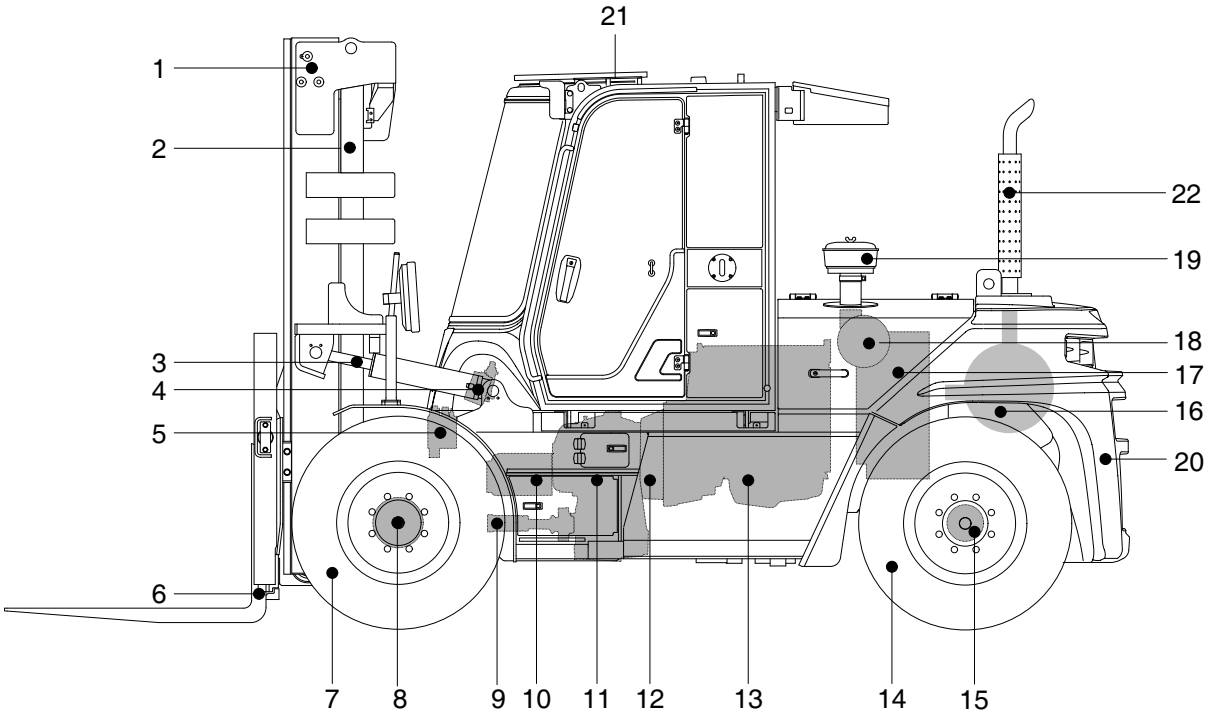

100D9V7PM01

1	Mast	9	Propeller shaft	17	Radiator
2	Lift cylinder	10	Hydraulic pump	18	Air cleaner
3	Tilt cylinder	11	Transmission	19	Precleaner
4	Steering unit	12	Torque converter	20	Counterweight
5	Main control valve	13	Engine	21	Cabin
6	Fork	14	Rear wheel	22	Silencer
7	Front wheel	15	Steering axle		
8	Drive axle	16	Aftertreatment		

2) SERVICE LOCATIONS

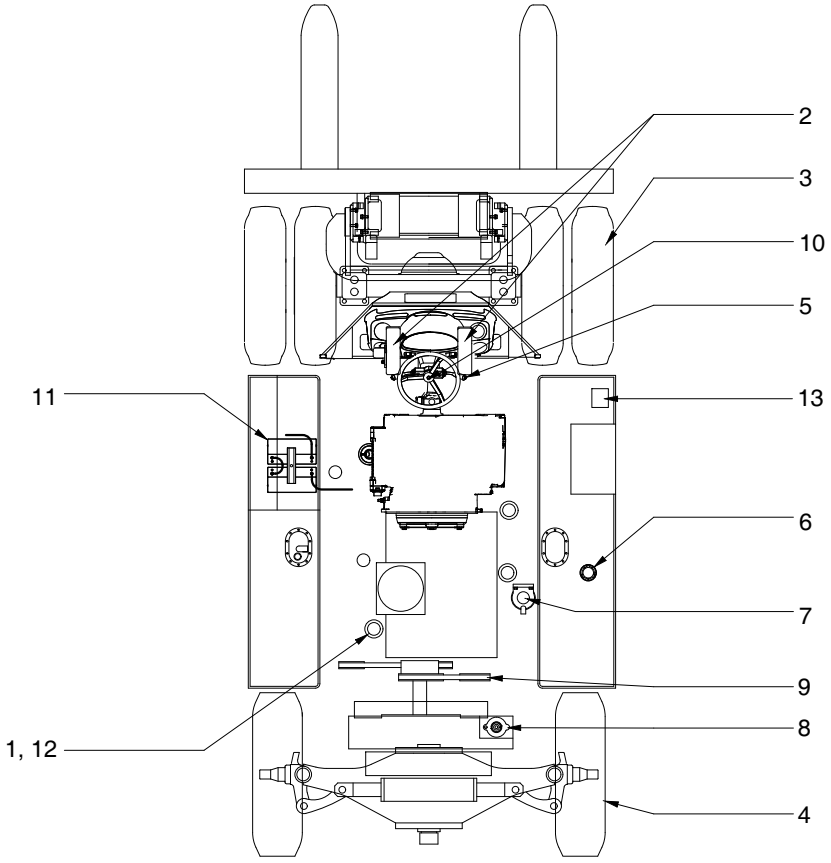

50D9MA011A

※ Service intervals are based on the hourmeter reading.

※ Stop the engine when servicing.

※ Do not open the cap or drain plug to avoid injury by unexpected spouting of high temperature fluid or gas.

※ Open the cap slowly to relieve pressure.

※ Always keep the surface of control & instrument panels clean in case of damage or malfunction detected in panel, replace it with a new one.

※ Depending on the ambient and operation contions, the replacement cycle may be shortened.

- All harsh working environment
- Long term heavy load operation
- High and low temperature working environment
- Sudden change in temperature
- Dusty or sandy working environment
- Highly corrosive chemical working environment
- Damp working environment

※ For other details, refer to the service manual.

3) DAILY (OR EVERY 10 HOURS) CHECK LIST

Item No.	Description	Service Action	Oil symbol	Capacity ℓ (U.S. gal)	Service point	Remark
1	Engine oil level	Check, Add	EO	12 (3.17)	1	7-17
2	Pedal linkage operation	Check, Adjust	-	-	1	7-50
3	Drive rim and tire air pressure	Check, Add	-	-	2	5-3, 7-14
4	Steer rim and tire air pressure	Check, Add or Replace	-	-	2	5-3, 7-14
5	Lamp operation	Check, Replace	-	-	10	7-49
6	Fuel level	Check, Add	DF	171.5 (45.3)	1	5-13
7	Fuel filter and fuel prefilter	Check, Drain	-	-	1	7-26
8	Radiator coolant	Check, Add	C	14 (3.75)	1	7-19
9	Fan belt tension and damage	Check, Adjust, Replace	-	-	1	7-24
10	Horn operation	Check, Replace	-	-	1	7-49
11	Battery	Check, Clean	-	-	1	7-44, 45
12	Crankcase breather hose	Check	-	-	1	-
13	DEF level	Check, Add	DEF	43 (11.4)	1	7-28, 29

※ Oil symbol
Refer to the recommended lubricants for specification.
DF : Diesel fuel HO : Hydraulic oil EO : Engine oil GO : Gear oil
MO : Transmission oil C : Coolant G : Grease DEF : Diesel exhaust fluid

4) PERIODICAL CHECK LIST

Service item		Oil Symbol	Service interval Hours								Initial Hours		
			50	250	500	1000	1500	2000	3000	4000	50	100	250
Tightening (Mounting bolt)	Pump, MCV, steering unit				T								T
	Tilt cylinder rod cover				T								T
	Lift, attachment, steering cylinder							T					
	Mast				T								
	Drive and steering axle				T								
	Drive and steering axle wheel		T										
	Counterweight, cabin		T										
	Engine, radiator, transmission		T										
	Hose, fitting, clamp (fuel, coolant, hydraulic)							T					
Lubrication	Tilt pin and mast roller	G			L								L
	Lift chain	EO			L								L
	Steering axle (linkage, kingpin, trunnion	G		L									
	Attachment cylinder rod and tube end			L									
	Drive shaft			L*1	L*2								
	Tilt cylinder rod	G		L*1	L*2								
	Tilt cylinder tube end	G			L								
	Steering unit spline (column shaft)	G						L					
Oli Leakage	Hydraulic tank				I								I
	Valve (MCV, cut-off, brake)				I								I
	Pump, steering unit				I								I
	Lift, tilt, steering cylinder			I*1	I*2								I
Function test	Steering wheel operation				I								I
	Natural drop and forward tilt							I					
	Fork load indicator (option)							I					
	Mast tilt angle measurement							M					

*1 Harsh condition *2 Normal condition *3 Conventional hydraulic oil *4 Hyundai genuine long life hydraulic oil

A : Aid C : Checking L : Lubrication R : Replacement T : Retightening

I : Visual inspection (repair or replace if required) M : Measurement (adjust if required)

Service item		Oil Symbol	Service interval Hours								Initial Hours		
			50	250	500	1000	1500	2000	3000	4000	50	100	250
Periodic replacement parts	Engine oil	EO			R						R		
	Engine oil filter				R						R		
	Fuel filter					R							
	Fuel prefilter element					R							
	Air cleaner element			Clean	Clean	Clean	Clean	R					
	Transmission oil	MO			A	R						R	
	Transmission oil filter					R						R	
	Axle gear oil	GO			A	R						R	
	Brake cooling oil & strainer	BO		A		R							
	Radiator coolant	C						R					
	DEF supply module filter									R			
	Urea level sensor suction filter							R					
	Urea coolant filter				Clean	Clean	Clean	Clean					
	Charge air cooler				Clean								
	Cut-off valve line filter					Clean		R					
	Air conditioner filter				Clean	R							
	Fan belt tensioner					C							
	Fan belt					R							
	Hydraulic oil tank air breather element			R*1	R*2								
	Hydraulic oil return filter				R								R
	Hydraulic oil suction strainer							Clean					
	Hydraulic oil	HO		A				R*3		R*4 (5000)			

*1 Harsh condition *2 Normal condition *3 Conventional hydraulic oil *4 Hyundai genuine long life hydraulic oil

A : Aid C : Checking L : Lubrication R : Replacement T : Retightening

I : Visual inspection (repair or replace if required) M : Measurement (adjust if required)

1) VISUAL INSPECTION

First, perform a visual inspection of the lift truck and its components. Walk around the truck and take note of any obvious damage or maintenance problems.

Check to be sure all capacity, safety, and warning plates are attached and legible.

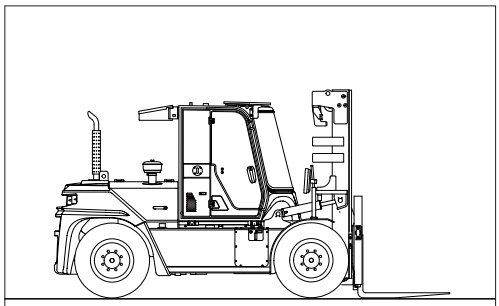

100D9V7PM02

※ **NAMEPLATES AND DECALS : Do not operate a lift truck with damage or lost decals and nameplates. Replace them immediately. They contain important information.**

Inspect the truck, before and after starting the engine, for any sign of external leakage of fuel, engine coolant, transmission fluid, etc..

Check for hydraulic oil leaks and loose fittings.

⚠ **HYDRAULIC FUILD PRESSURE: Do not use your hands to check for hydraulic leakage. Fluid under pressure can penetrate your skin and cause serious injury.**

2) CABIN

Be sure that the driver's cabin and any safety devices are in place, undamaged, and attached securely. Check the cabin for damage. Be sure that it is properly positioned and all mounting fasteners are in place and tight.

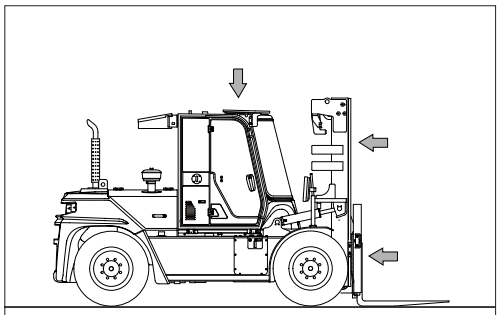

100D9V7PM07

3) LOAD HANDLING COMPONENTS

Inspect the mast assembly, load backrest, rails, carriage rollers, lift chains, and lift and tilt cylinders. Look for obvious wear and maintenance problems and damaged or missing parts. Check for any loose parts or fittings. Check for leaks, damaged or loose rollers, and rail wear (metal flaking). Carefully check the lift chains for wear, rust, corrosion, cracked or broken links, stretching etc.. Check that the lift and carriage chains are correctly adjusted to have equal tension. Check that the lift chain anchor fasteners and locking means are in place and tight. Inspect all lift line hydraulic connections for leaks.

△ **Mast and lift chains require special attention and maintenance to remain in safe operating condition. Refer to lift chain maintenance in this section for additional information.**

4) FORKS

Inspect the load forks for cracks, breaks, bending, and wear. The fork top surfaces should be level and even with each other. The height difference between both fork tips refer to below table.

Model	Fork length (mm)	Height difference (mm)
70/80D-9V	equal or below 1500	3
	above 1500	4

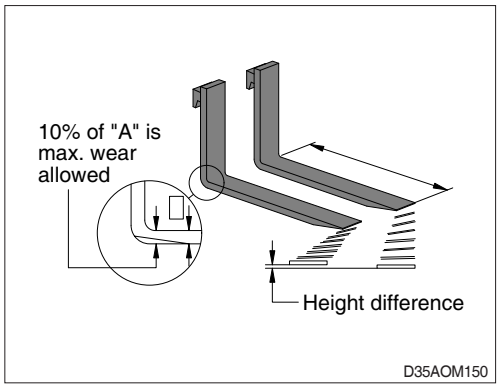

⚠ If the fork blade at the heel is worn down by more than 10%, the load capacity is reduced and the fork must be replaced.

Inspect the forks for twists and bends. Put a 5 cm (2 in) thick metal block, at least 10 cm (4 in) wide by 61 cm (24in) long with parallel sides, on the blade of the fork with the 10 cm (4 in) surface against the blade. Put a 61 cm (24 in) carpenter's square on the top of the block and against the shank. Check the fork 51cm (20 in) above the blade to make sure it is not bent more than 12.5 mm (0.5 in) maximum.

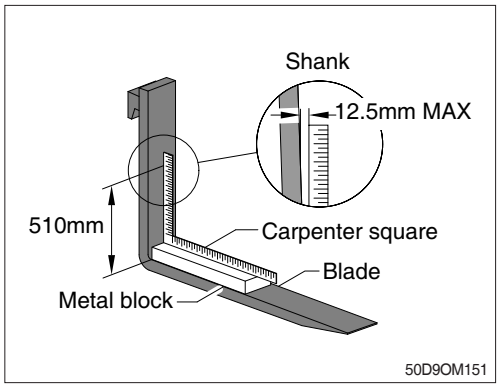

※ If the fork blades are obviously bent or damaged, have them inspected by a trained maintenance person before operating the truck.

Inspect the fork locking pins for cracks or damage. Reinsert them and note whether they fit properly.

5) SIDE SHIFT

When operating the lever for the side shift and the hanger bar which the forks and the backrest are mounted on it, operator can accurately insert the forks under pallets or stack loads correctly without moving the fork lift.

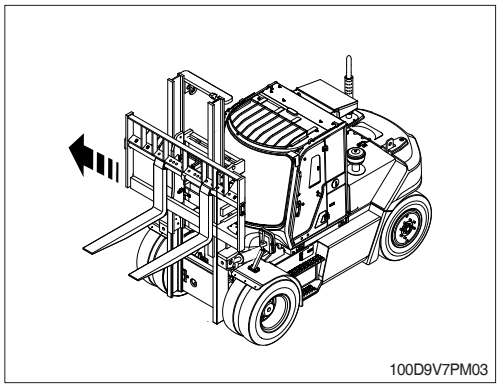

6) WHEEL AND TIRES

Check the condition of the drive and steering wheels and tires. Remove objects that are embedded in the tread. Inspect the tires for excessive wear and breaks or **chunking out**.

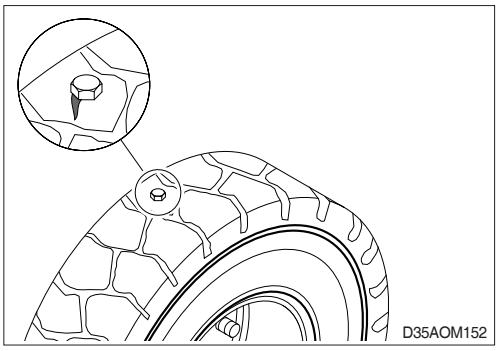

Check all wheel lug nuts or bolts to be sure none are loose or missing. Replace missing bolts or lug nuts. Torque loose or replaced items to specifications.

⚠ Check tire pressure from a position facing the tread of the tire, not from the side. Use a long handled gauge to keep your body away from the side. If tires are low, do not operate and do not add air. Check with a mechanic. The tire may require removal and repair.
Incorrect (low) tire pressure can reduce the stability of your lift truck. Do not operate truck with low tire pressure.

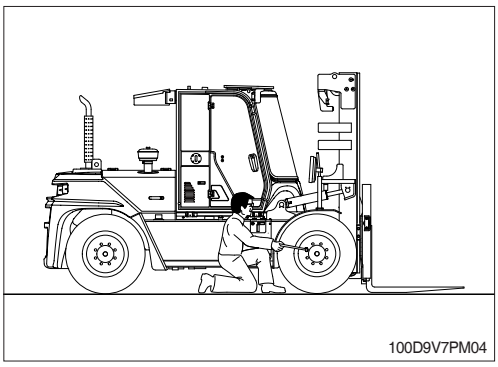

· Proper cold inflation : Refer to attached decal.

7) TILTING CABIN

⚠ **Keep clearance of people except the operator before tilting the cabin.**

⚠ **Before tilting the cabin, make sure that the mast is vertical or tilted forward. Otherwise, the operation could be blocked by mast tilt cylinders.**

⚠ **Keep the cabin doors closed before tilting the cabin.**

(1) Locate the truck on the plain and stable floor.

※ **Apply parking brake before servicing.**

(2) Turn the start switch to OFF position.
Remove the frame cover (LH) by removing the mounting bolts. The cabin tilt switch is located between cabin and side frame.

(3) By tilting the cabin, service of hydraulic and electric system such as hydraulic components, hydraulic pipings, electric components, and electric wirings can be easily performed. It is recommended that the service requiring tilting cabin must be carefully performed with a skilled service man.

(3) Release the cabin tilt lock assembly by turning the tilt lever to the UNLOCK position.

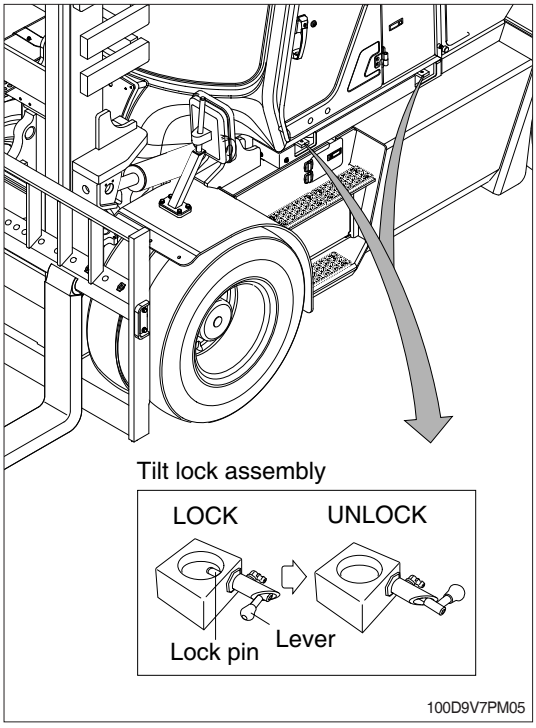

(4) **Tilting and returning cabin**

① **Tilting cabin**

After keeping clearance of the people except the operator along with sounding horn, turn the hand pump lever clockwise and then, continuously press the cabin tilt switch to tilt the cabin to right side.

② **Returning cabin**

After keeping clearance of the people except the operator along with sounding horn, turn the hand pump lever counterclockwise and then, continuously press the cabin tilt switch to return the cabin to original location.

※ **Take care that it must perform by a trained people in order to prevent from abnormal operation.**

※ **Refer to page 3-47 for the cabin tilt switch and hand pump lever.**

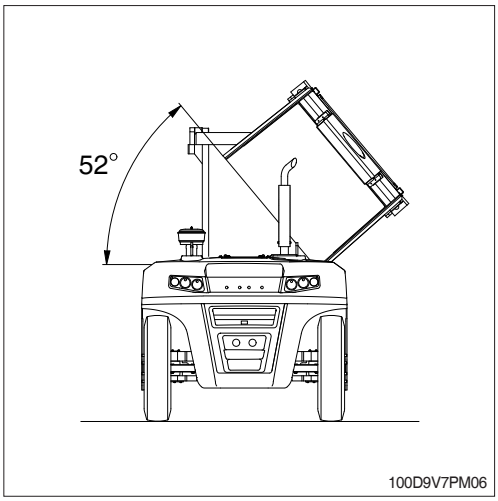

⚠ **Do not operate cabin tilting function while the power is ON or engine is running.**

⚠ **Do not operate the cabin tilt switch or any control parts while servicing under the tilted cabin. It can cause severe injury or death.**

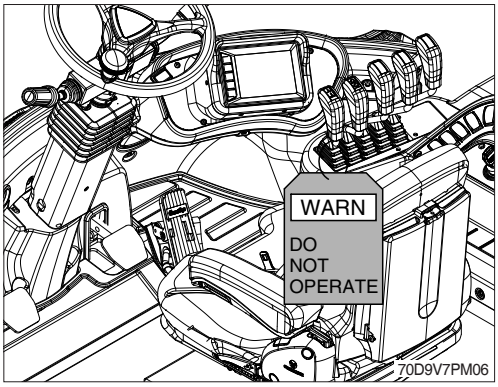

(5) **Fill and check hydraulic oil for hand pump**

Open upper cap and fill 0.8 ℓ (0.21 U.S. gallons) by using funnel. After filling, operate tilt cylinder 2~3 times and close the cabin completely to check the oil level in tank. If necessary, fill more oil to keep the level.

· Tank capacity : 0.7 ℓ (0.18 U.S. gallons)

· System total capacity : 1.2 ℓ (0.32 U.S. gallons)

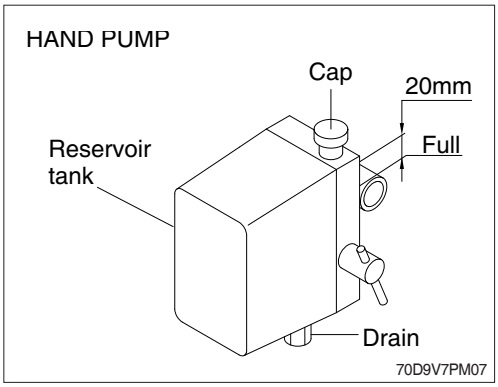

1) CHECK ENGINE OIL LEVEL

Check the oil level with the truck on a flat ground before starting engine.

(1) Pull out the dipstick and wipe with a clean cloth.

(2) Check the oil level by inserting the dipstick completely into the hole and pulling out again.

(3) If oil level is LOW, add oil and then check again.

※ **If the oil is contaminated or diluted, change the oil regardless of the regular change interval.**

※ **Check oil level after engine has been stopped for 15 minutes.**

⚠ **Do not operate unless the oil level is in the normal range.**

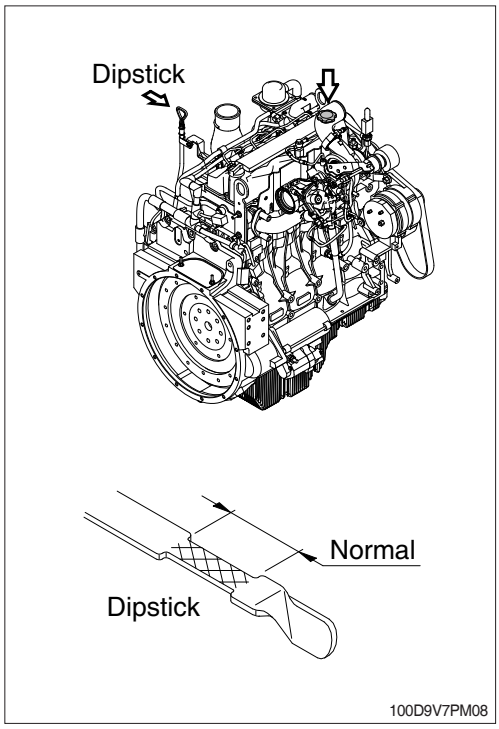

2) REPLACEMENT OF ENGINE OIL AND OIL FILTER

(1) Warm up the engine until the water temperature reaches 60 ˚C (140 ˚F).

(2) Remove the oil drain plug. Drain the oil immediately to be sure all the oil and suspended contaminants are removed from the engine.

※ **A drain pan with a capacity of 20 liters (5.3 U.S. gallons) will be adequate.**

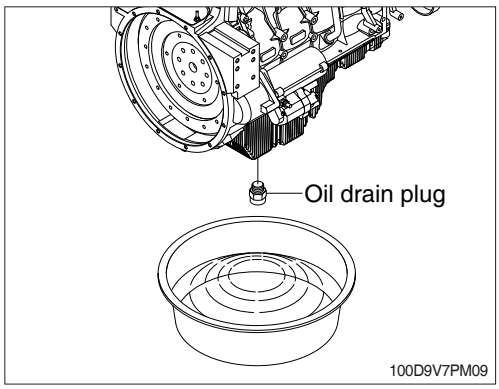

(3) Clean around the filter head, remove the filter by the filter wrench and clean the gasket surface.

※ **The O-ring can stick on the filter head. Be sure it is removed before installing the new filter.**

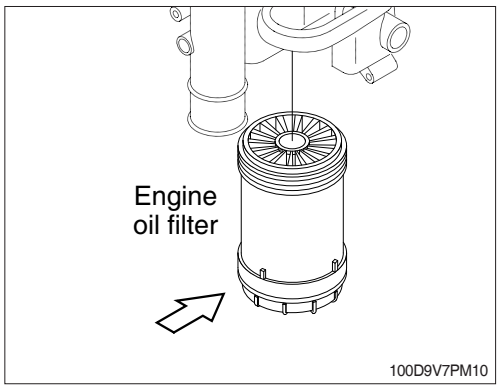

(4) Apply a light film of lubricating oil to the gasket sealing surface before installing the filter.

※ **Fill the filter with clean lubricating oil.**

⚠ **The lack of lubrication during the delay until the filter is pumped full of the start-up can damage the engine.**

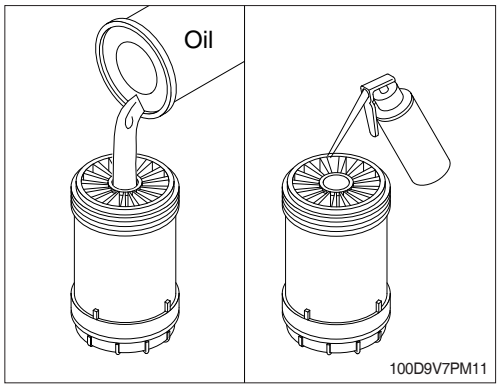

(5) Install the filter to the filter head.

※ **Mechanical over-tightening may distort the threads or damage the filter element seal.**

· Install the filter as specified by the filter manufacturer.

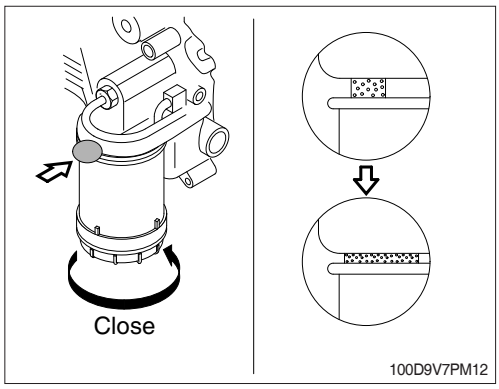

(6) Fill the engine with clean oil to the proper level.

· Quantity : 12 ℓ (3.17 U.S.gallons)

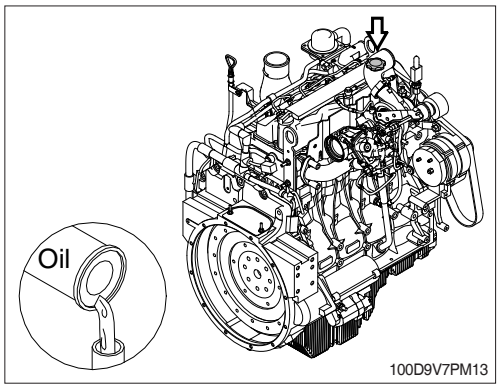

(7) Operate the engine at low idle and inspect for leaks at the filters and the drain plug.
Shut the engine off and check the oil level with the dipstick. Allow 15 minutes for oil to drain down before checking.

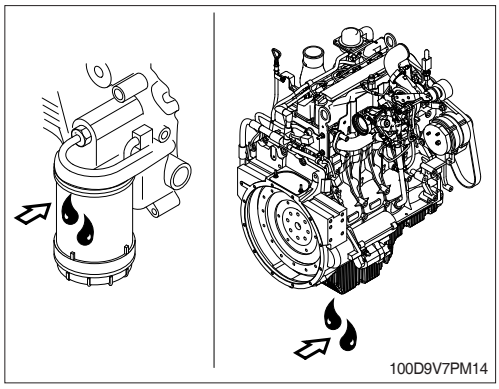

3) CHECK COOLANT LEVEL

⚠ **Do not remove the surge tank cap when the engine is hot.**
Then loosen the cap slightly to release unwanted pressure before you remove the cap fully.

(1) Make sure that the coolant level is between max (A) and min (B).

(2) If the coolant level is too low, find out the cause that there is less coolant.
Case 1
If the coolant decreases by evaporation, add only clean and soft water.
Case 2
If the coolant decreases by leak, add coolant of the same manufacturer and brand in the
specified mixture ratio (clean, soft water and L.L.C.). If you cannot identify the coolant brand, drain all the remaining coolant and add a new brand of coolant mix.

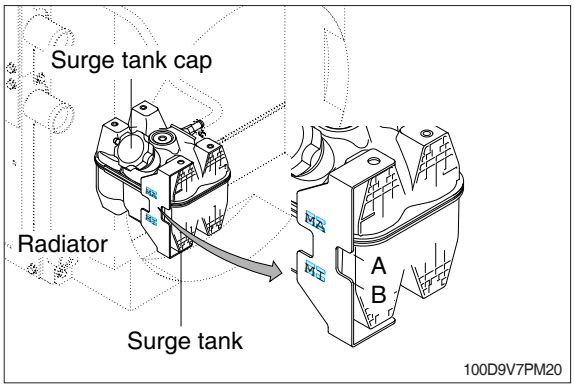

A MAX
B MIN

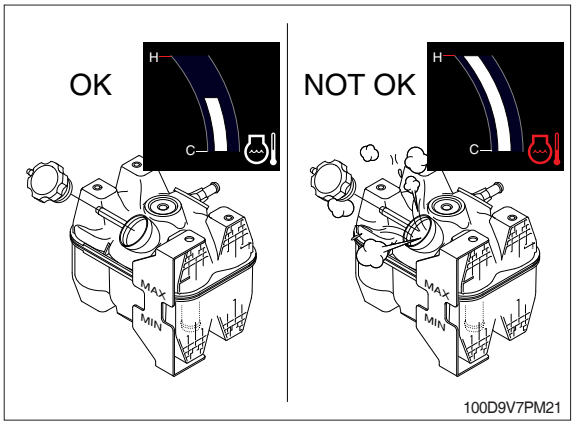

※ **When you add the coolant, release the air from the engine coolant channels. The engine releases the air when it shakes the radiator upper and lower hoses.**
Make sure that you close the surge tank cap correctly. If the cap is loose or incorrectly closed, coolant can flow out and the engine can overheat.
Do not use an anti-freeze and scale inhibitor at the same time.
Do not mix the different type or brand of L.L.C..

4) FLUSHING AND REFILLING OF RADIATOR

(1) Change coolant

⚠ Avoid prolonged and repeated skin contact with used antifreeze. Such prolonged repeated contact can cause skin disorders or other bodily injury.
Avoid excessive contact-wash thoroughly after contact.
Keep out of reach of children.

※ Protect the environment : Handling and disposal of used antifreeze can be subject to federal, state, and local law regulation.
Use authorized waste disposal facilities, including civic amenity sites and garages providing authorized facilities for the receipt of used antifreeze.
If in doubt, contact your local authorities for guidance as to proper handling of used antifreeze.

⚠ Wait until the temperature is below 50℃ (122°F) before removing the coolant system pressure cap.
Failure to do so can cause personal injury from heated coolant spray.
Drain the cooling system by opening the drain valve on the radiator and opening the drain valve on the bottom of the engine oil cooler housing.
A drain pan with a capacity of 20 liters (5.3 U.S. gallons) will be adequate.

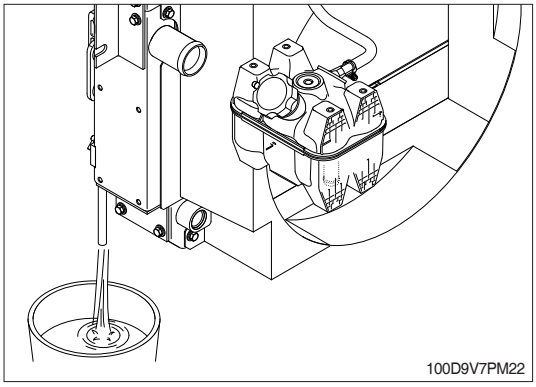

(2) Flushing of cooling system

① Fill the system with a mixture of sodium carbonate and water (or a commercially available equivalent).

※ Use 0.5 kg (1.0 lb) of sodium carbonate for every 23 liters (6.0 U.S. gallons) of
※ water.
Do not install the surge tank cap. The engine is to be operated without the cap for this process.

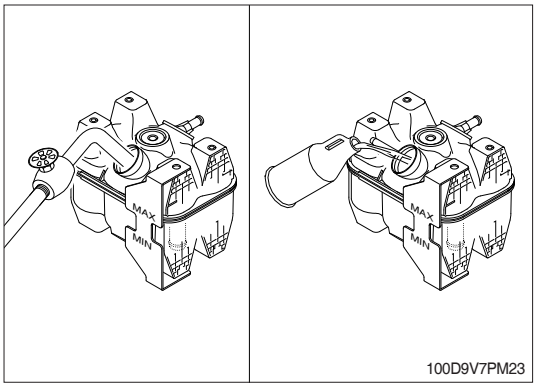

※ **During filling, air must be vented from the engine coolant passages.**
The system must be filled slowly to prevent air locks or serious engine damage can result. Wait 2 to 3 minutes to allow air to be vented, then add mixture to bring the level to the top.

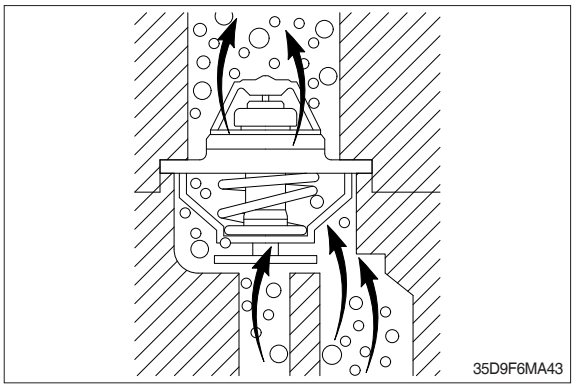

② Operate the engine for 5 minutes with the coolant temperature above 80℃ (176°F).
Shut the engine off, and drain the cooling system.

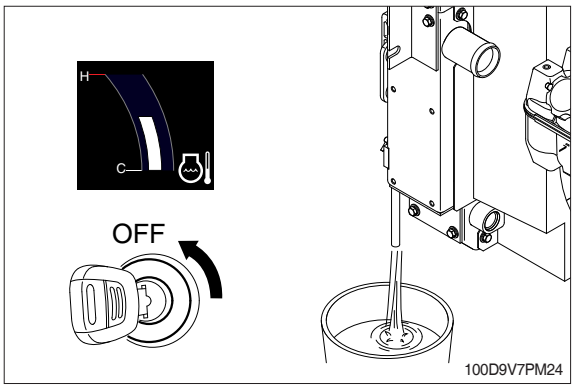

③ Fill the cooling system with clean water.
※ **Be sure to vent the engine and aftercooler for complete filling.**
※ **Do not install the surge tank cap or the new coolant filter.**

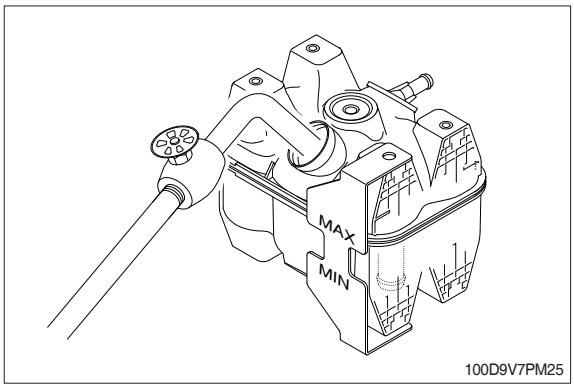

④ Operate the engine for 5 minutes with the coolant temperature above 80℃ (176°F).
Shut the engine off, and drain the cooling system.
※ **If the water being drained is still dirty, the system must be flushed again until the water is clean.**

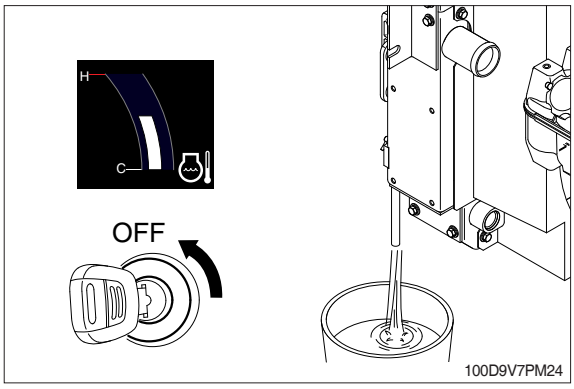

(3) Cooling system filling

① Use a mixture of 50 percent water and 50 percent ethylene glycol antifreeze to fill the cooling system. Refer to page 7-60.

※ **Use the correct amount of DCA4 corrosion inhibitor to protect the cooling system.**

※ **Do not use hard water such as river water or well water.**

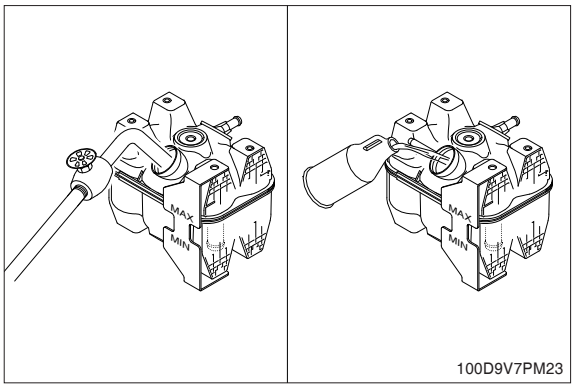

② The system has a maximum fill rate of 12.5 liters (3.3 U.S. gallons) per minute. Do not exceed this fill rate.

※ **The system must be filled slowly to prevent air locks.**
During filling, air must be vented from the engine coolant passage.

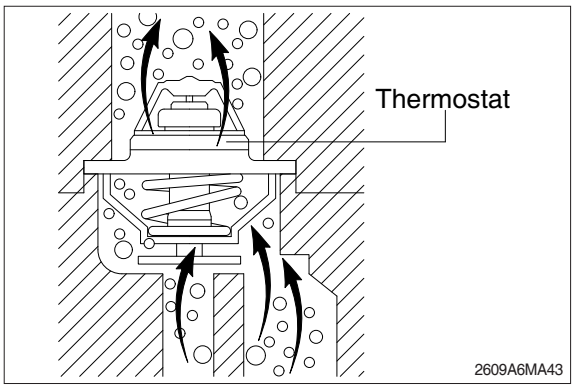

③ Install the pressure cap. Operate the engine until it reaches a temperature 80 ˚C (176 ˚F), and check for coolant leaks. Check the coolant level again to make sure the system is full of coolant.

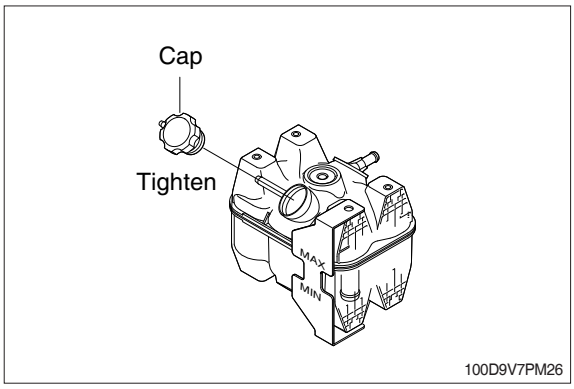

5) CLEAN RADIATOR AND OIL COOLER

Check, and if necessary, clean and dry outside of radiator and oil cooler. After working in a dusty place, clean radiator more frequently.

(1) Visually inspect the radiator for clogged radiator fins.

(2) Use 550 kPa (80 psi) air pressure to blow the dirt and debris from the fins.
Blow the air in the opposite direction of the fan air flow.

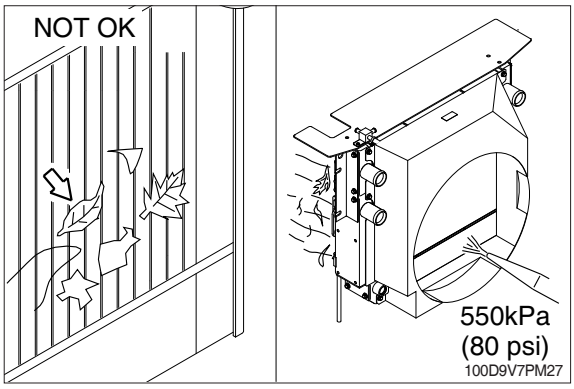

(3) Visually inspect the radiator for bent or broken fins.

※ **If the radiator must be replaced due to bent or broken fins which can cause the engine to overheat, refer to the manufacturer's replacement procedures.**

(4) Visually inspect the radiator for core leaks.

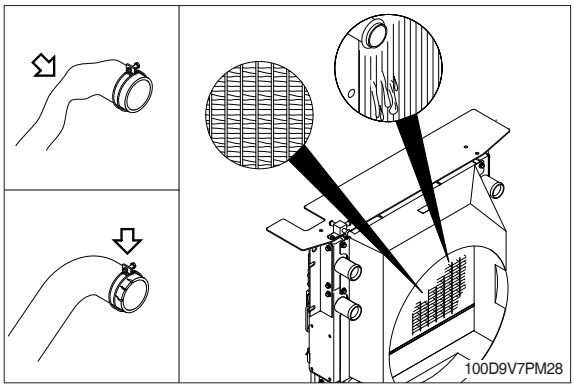

6) CHECK CHARGE AIR COOLER

Inspect the charge air cooler for dirt and debris blocking the fins. Check for cracks, holes, or other damage. If damage is found, please contact Hyundai distributor.

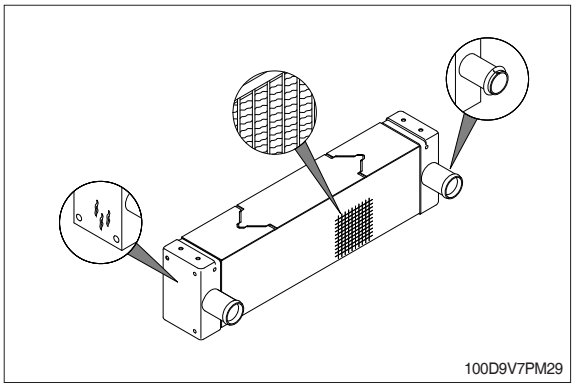

7) FAN BELT TENSIONER

(1) With the engine stopped, check the tensioner arm, pulley, and stops for cracks. If any cracks are found, the tensioner must be replaced.

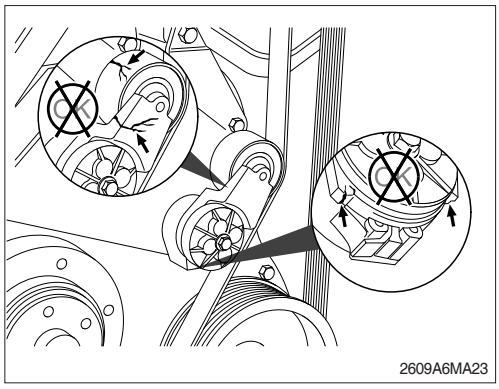

(2) With the belt installed, verify that neither tensioner arm stop is in contact with the spring case stop.
After replacing the belt, if the tensioner arm stops are still in contact with the spring case stop, replace the tensioner.

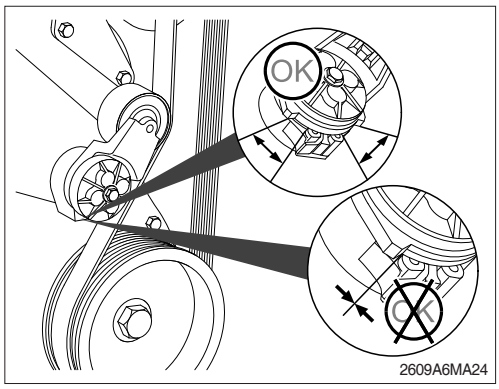

(3) With the belt removed, verify that the tensioner arm stop is in contact with the spring case stop.
If these two are not touching, the tensioner must be replaced.

※ **After replacing the belt, if the tensioner arm stop is still in contact with the spring case stop, the tensioner must be replace.**

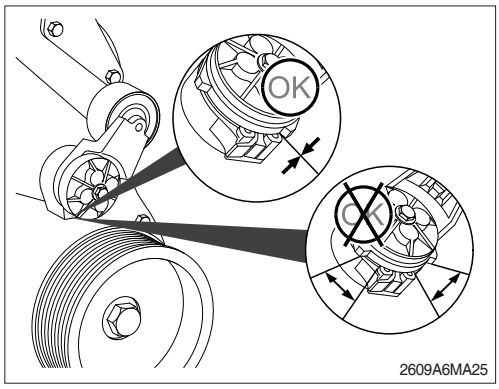

(4) Check the location of the drive belt on the belt tensioner pulley. The belt should be centered on, or close to the middle of, the pulley. Misaligned belts, either too far forward or backward, can cause belt wear, belt roll-offs, or increase uneven tensioner bushing wear.

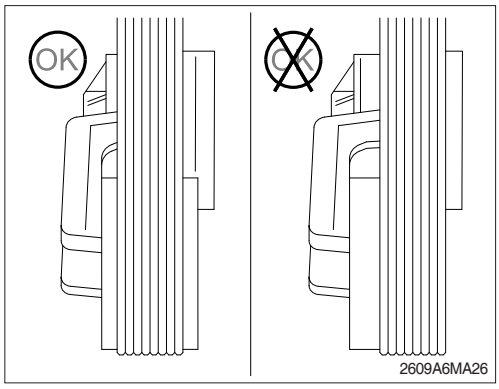

8) AIR CLEANER ELEMENT

(1) Removal

① **Double element type**

Remove the cover by pulling off the clamps, and loosen the wing nut to pull out the outer element.

※ **During periodic service, replace only the outer element. Do not replace the inner element unless damaged.**

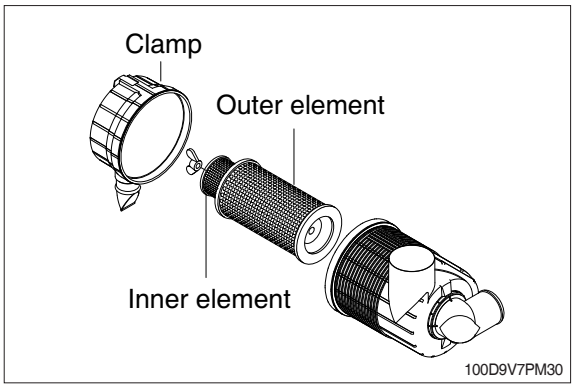

(2) Cleaning

① **Cleaning with compressed air**

Blow dry compressed air (max 30 psi) from inside along pleats. Next blow air form outside along pleats, then blow from inside again and check element.

② **Cleaning with cleaning agent**

If there is grease or carbon on the element, use

a special element cleaner, following the instruction given with the cleaner. Have a spare element ready so that the truck can start working again immediately.

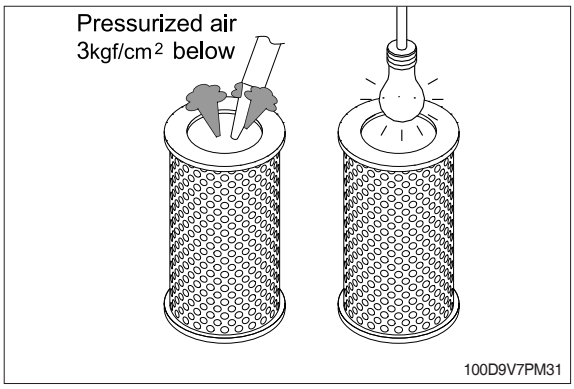

※ Keep clean condition for the air cleaner element all the times.
A dirty air cleaner could be decreased output power of the engine at worst and it also will be caused to increase fuel consumption and black smoke.

(3) Installation

When installing the element, check that the cleaner housing and element cover are completely in close contact then tighten the nut.

※ Make sure that vacuum valve is securely installed. If it is loosely installed, dust will be drawn in and air cleaner will fail to function properly.

⚠ When using compressed air, use safety glasses, face shield and other protective clothes. Never point the air nozzle at anyone. Never clean or replace air cleaner while engine is running.

⚠ OSHA approved eye protection rated for 200 kPa (30 psi) is required for air cleaning operation.
Replace element if exhaust is black, or if lack of engine power is noted even after cleaning element. When cleaning the element or element housing, cover the air flow outlet port of the housing with a clean cloth or tape to prevent dirt or dust from entering. Do not clean the elements by bumping or tapping them.

9) FUEL TANK

(1) Fill fuel fully when system the operation to minimize water condensation, and check it with fuel gauge before starting the machine.

(2) Drain the water and sediment in the fuel tank by opening the drain plug.

※ Be sure to LOCK the cap of fuel tank.

※ Remove the strainer of the fuel tank and clean it if contaminated.

⚠ Stop the engine when refueling.
All lights and flames shall be kept at a safe distance while refueling.

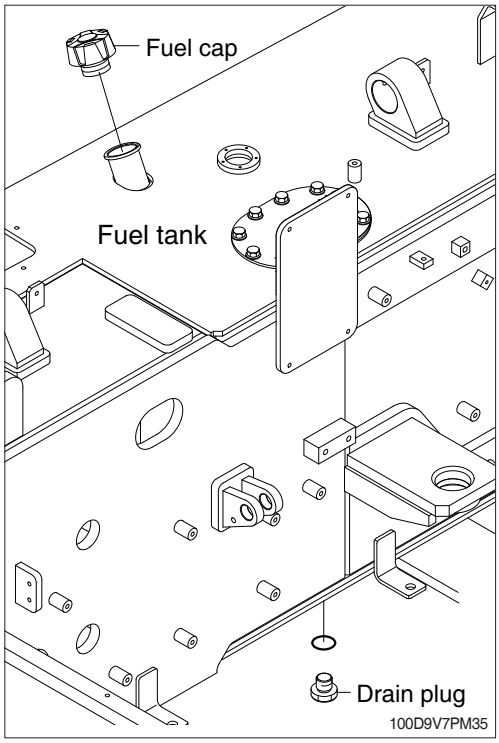

10) FUEL PREFILTER

※ **Inspect or drain the collection bowl of water daily and replace the element every 500 hours.**

(1) Drain water

① Open bowl drain valve to evacuate water.

② Close drain valve.

※ **Don't tighten up a drain valve so strong.**

※ **Please inspect and drain water frequently for remain water volume to be less than 1/3 volume of a collection bowl.**

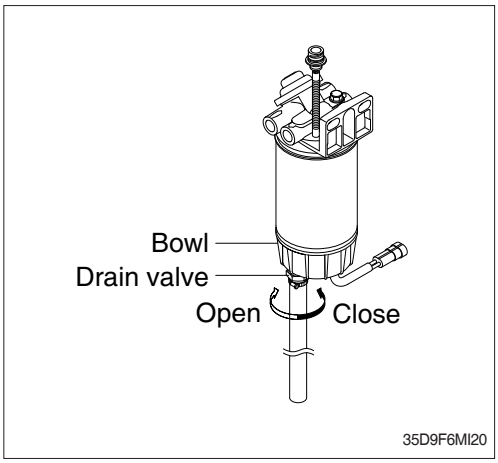

(2) Replace element

① Loosen the air vent plug and drain the fuel of the unit. Follow "Drain water" instructions above.

② Remove element and bowl from filter head.

※ **The bowl is reusable, do not damage or discard.**

③ Separate element from bowl. Clean bowl and seal gland.

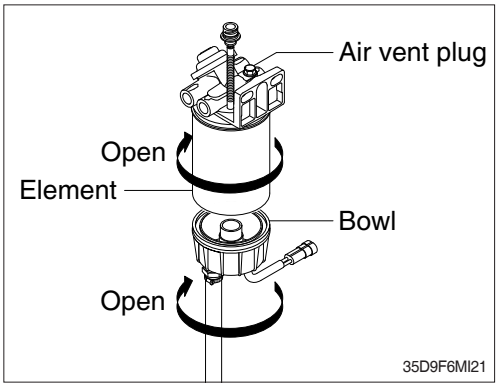

④ Lubricate new bowl seal with clean fuel or motor oil and place in bowl gland.

⑤ Attach bowl to new element firmly by hand.

⑥ Lubricate new element seal and place in element top gland.

⑦ Attach the element and bowl to the head.

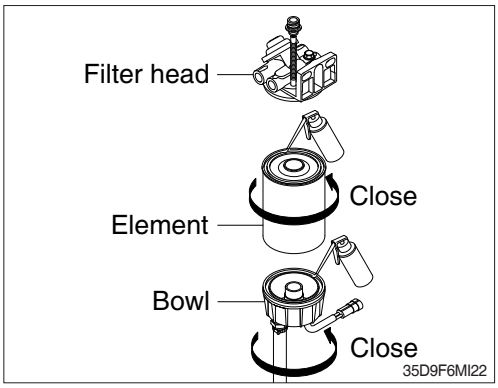

11) REPLACEMENT OF FUEL FILTER ELEMENT

※ **Clean all around the filter area before remove the fuel filter. Dirt or contaminants can damage the fuel system.**

(1) Remove the fuel filter cartridge (1) with 1 inch hex wrench.

※ **Make sure the O-ring does not stick to the fuel filter head.**
Remove the O-ring with a screwdriver, if necessary.

(2) Apply a thin layer of fuel to the surface of the new filter cartridge O-ring before you put it on.

※ **Do not pour fuel directly in the center of the filter, since this will allow unfiltered fuel to enter the system and can cause damage to fuel system components.**

(3) Tighten the new cartridge until the gasket contacts the filter head surface and tighten it an additional 3/4 turn after contact by hand.
· Tightening torque : 3.9 kgf·m (38 lbf·ft)

※ **It is not necessary to vent air from the high pressure system before starting the engine.**
Cranking the engine will prime the fuel system.

(4) Operate the engine for a while and check if there is not the fuel leakage from the filter.

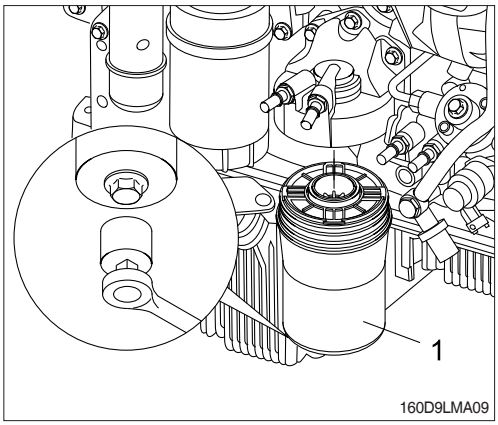

1 Fuel filter cartridge

12) BLEEDING THE FUEL SYSTEM

(1) Loosen air vent plug at the outlet of prefilter.

(2) Do hand-priming the lift pump repeatedly until air bubbles comes out from air vent plug hole completely.

(3) Tighten air vent plug to its origin position.

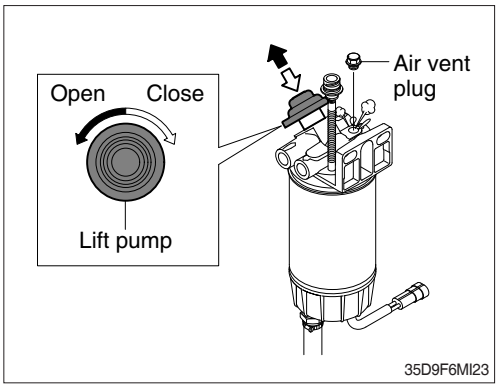

⚠ Do not vent the fuel system on a hot engine. this can cause fuel to spill onto a hot exhaust manifold, which can cause a fire.

⚠ The fuel pump, high-pressure fuel lines, and fuel rail contain very high-pressure fuel. Do not loosen any fittings while the engine is running. Personal injury and property damage can result. Wait at least 10 minutes after shutting down the engine before loosening any fittings in the high-pressure fuel system to allow pressure to do decrease to a lower level.

13) DIESEL EXHAUST FLUID DOSING UNIT FILTER

(1) Remove

※ **There may be residual DEF in the filter housing. A collection container placed below the DEF filter cap is recommended.**

① Inspect the area around the seal and vent of DEF/AdBlue® supply module filter cap for signs of leakage.

② Unscrew the DEF filter cap (1). A 27 mm wrench can be used on the cap to aid in removal.

③ Remove the aftertreatment DEF filter equalizing element (2).

④ Remove the old aftertreatment DEF dosing unit filter element (3). A disposable service tool is included with the filter to aid in filter removal.
Use the appropriate end of the tool, depending on the color of the plastic on the filter. When inserting the tool, a "click" sound can be heard which indicates proper engagement with the filter.

※ **If the filter element and equalizing element are removed from the aftertreatment DEF dosing unit, they must be discarded and replaced; regardless of condition.**

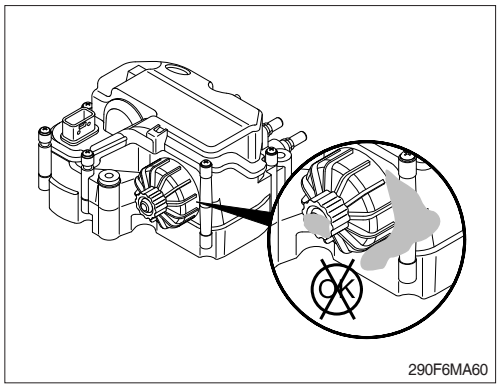

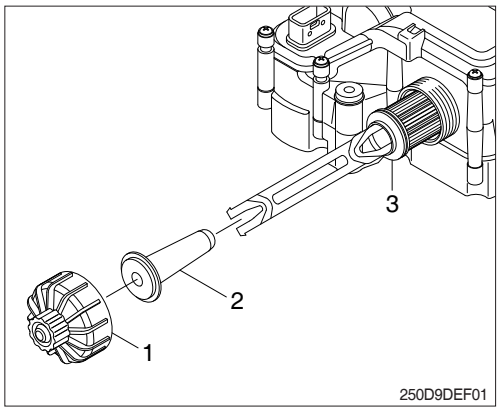

1 DEF dosing unit filter cap
2 DEF filter equalizing element
3 DEF dosing unit filter element

(2) Clean and inspect for reuse

① Inspect the aftertreatment DEF dosing unit filter cap for cracks or holes that could create a DEF leak path.

② Check the condition of the threads on the aftertreatment DEF dosing unit cap.

※ **If the threads are damaged, replace the aftertreatment DEF dosing unit filter cap.**

③ Inspect the aftertreatment DEF dosing unit threads. This is especially important if the aftertreatment DEF dosing unit cap was damaged.

※ **If the aftertreatment DEF dosing unit threads are damaged, replace the entire aftertreatment DEF dosing unit.**

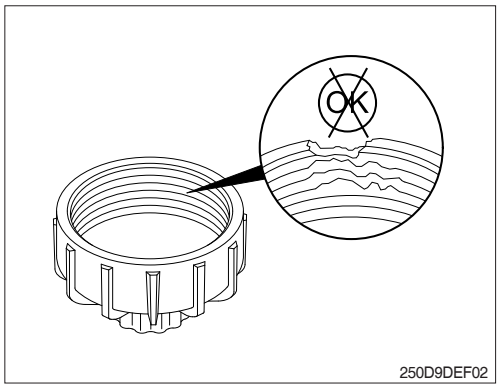

④ Clean the aftertreatment DEF dosing unit cap and threads on the dosing unit with warm water and a clean cloth.

※ **Never operate the truck with the DEF cap removed.**

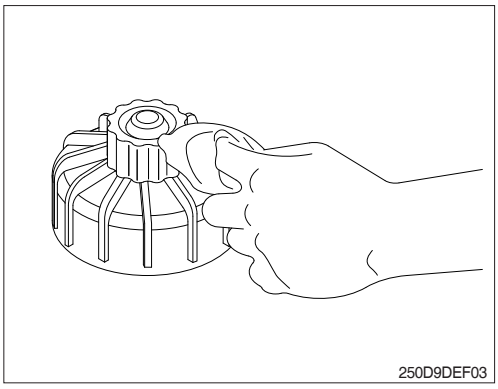

(3) Install

① Slide the DEF filter equalizing element (2) into the DEF filter cartridge (3).

② Insert the assembly into the aftertreatment DEF dosing unit.

③ Install and tighten the cap (1). A 27 mm wrench can be used to install and tighten the filter cap.

· Tightening torque : 2.0 kgf · m (14.5 lbf · ft)

※ **Lubrication of the DEF filter O-rings is not required.**

※ **The aftertreament DEF dosing system will not prime until the correct SCR temperatures are reached. To verify that there are no DEF leaks, test drive the truck for a minimum of 15 mimutes to get the SCR system up to temperature.**

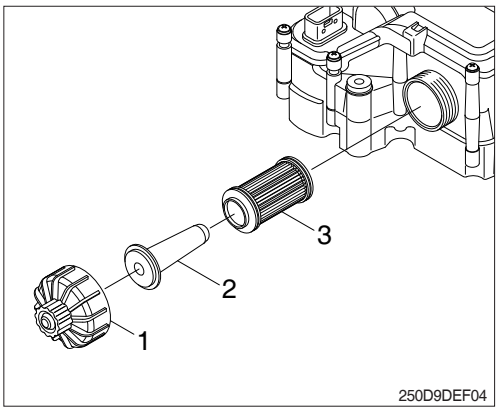

1 DEF dosing unit filter cap
2 DEF filter equalizing element
3 DEF dosing unit filter cartridge

14) DEF/AdBlue® SUPPLY MODULE FILTER

(1) Inspect the area around the DEF/AdBlue® supply module filter case for signs of leakage.

※ **Turn OFF the master switch mounted electric box.**

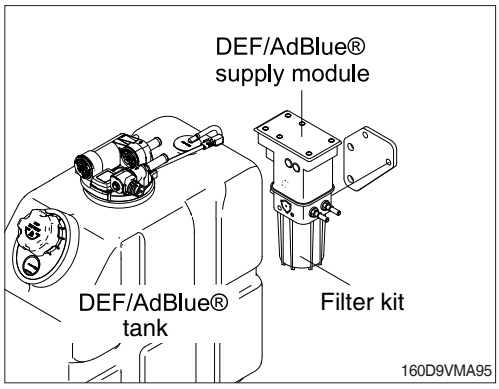

(2) Remove the filter case with the biotube pump spray and filter.

(3) Remove the filter and biotube pump spray from the case.

※ **Clean the case inside and biotube pump spray.**

(4) Insert a new filter and biotube pump spray into the case and tighten the case.

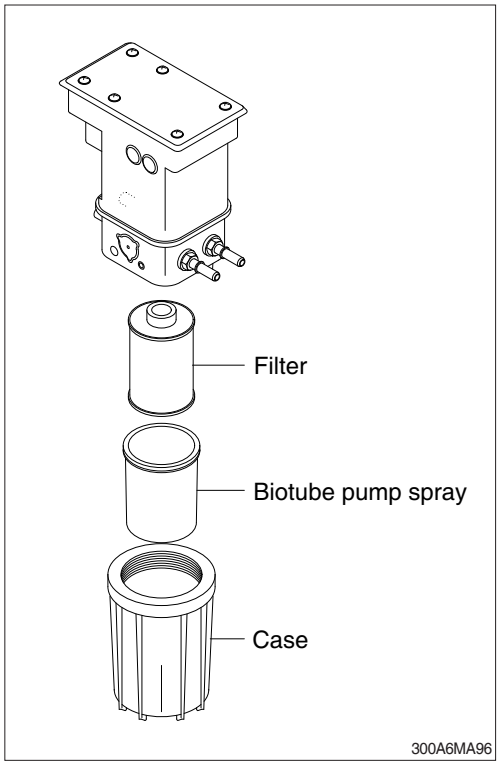

15) DEF/AdBlue® TANK

(1) The DEF/AdBlue® tank level must be checked daily with DEF/AdBlue® level gauge.

⚠ **It is unlawful to tamper with or remove any component of the aftertreatment system. It is also unlawful to use a catalyst solution that does not meet the specifications provided or the operate the truck with no catalytic solution.**

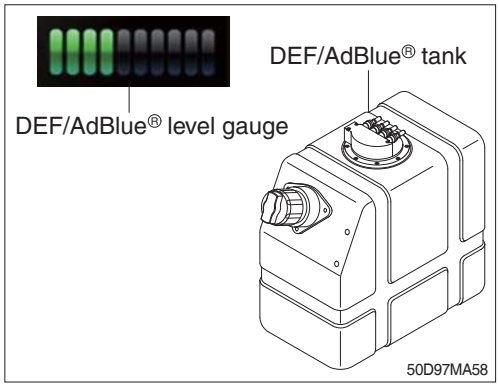

(2) If the DEF/AdBlue® level is found to below, DEF/AdBlue® must be added.

Before filling the tank

① Switch off the engine.

② Secure the truck against rolling away. Always fill the tank with at least 5 liters, as smaller amounts could cause malfuctions.

⚠ Do not allow diesel fuel to run into the DEF/AdBlue® tank. Otherwise, you could damage the exhaust gas aftertreatment system.

⚠ Do not mix additives to DEF/AdBlue®.

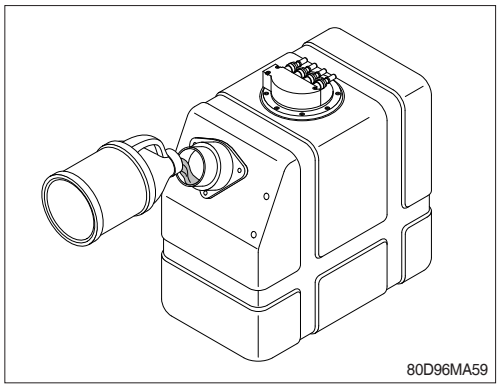

16) DEF/AdBlue® TANK FILTER

(1) Insert a hex wrench into the filter cover, rotate it anti-clockwise and remove the filter cover.

(2) Pull out the filter by using a long nose pliers.

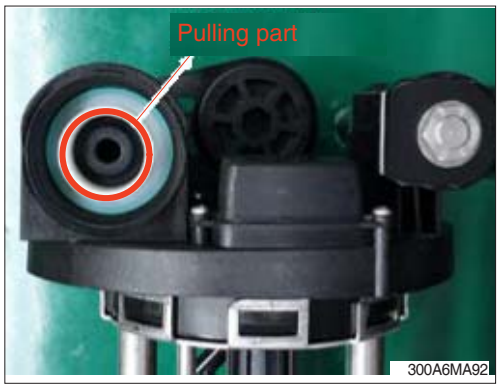

(3) Replace with a new filter.

(4) Place the filter cover and rotate the cover clockwise by using hex wrench.

※ **Replace the filter every 2000 hours.**

※ **If the filter is reused, take care not to damage the thread part of the filter with long nose pliers.**
Use protection material such as a cloth etc to grip part of the filter by the long nose pliers.

※ **Be careful not to cross-thread during reassembly.**

17) LEAKAGE OF FUEL

⚠ **Be careful and clean the fuel hose, injection pump, fuel filter and other connections as the leakage from these part can cause fire.**

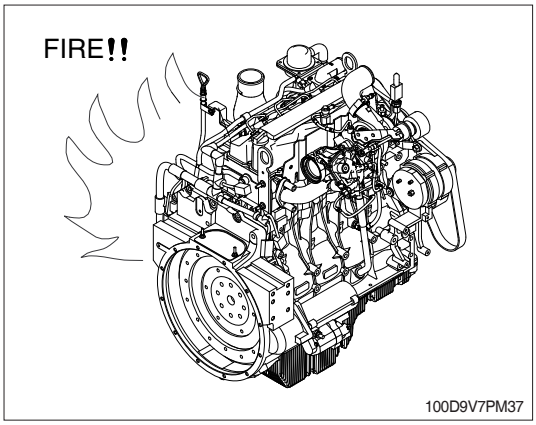

18) HYDRAULIC OIL CHECK

(1) Lower the forks on the ground at a flat location as in the illustration.
Stop the engine and then leave for about 5 minutes.

(2) Check the oil level at the hydraulic oil tank cap. The hydraulic oil tank cap is located on the top side of the hydraulic oil tank.

※ **Add hydraulic oil, if necessary.**

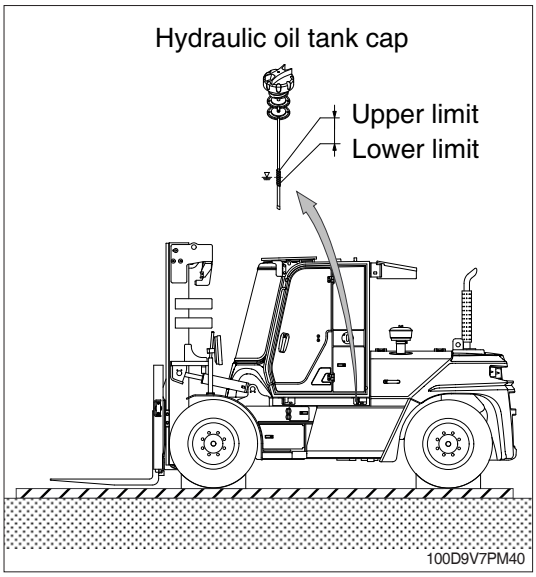

19) FILLING HYDRAULIC OIL

(1) Stop the engine to the position of level check.

(2) Check air breather element and replace it if necessary.

(3) Loosen cap and fill the oil to the specified level.

(4) Start engine after filling and operate the work equipment several times.

(5) Check the oil level at the level check position after engine stops.

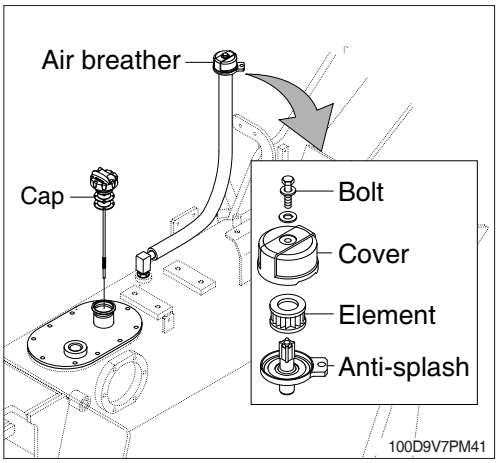

20) CHANGE THE HYDRAULIC OIL

(1) Lower the forks on the ground and extend the tilt cylinder to the maximum.

(2) Loosen the cap and relieve the pressure in the tank.

(3) Prepare a suitable drain pan.

(4) To drain the oil loosen the drain plug.

(5) After draining the oil, tighten the drain plug.
  · Tightening torque : 5 kgf·m (36.2 lbf·ft)

(6) Fill proper amount of recommended oil.

(7) Remove the suction strainer and clean it.

(8) Start engine and run continually. Release the air by full stroke of control lever.

※ **The oil must be free of bubbles. If bubbles are present in the oil, air is entering the hydraulic system. Inspect the suction hoses and hose clamps for leakage or damage.**

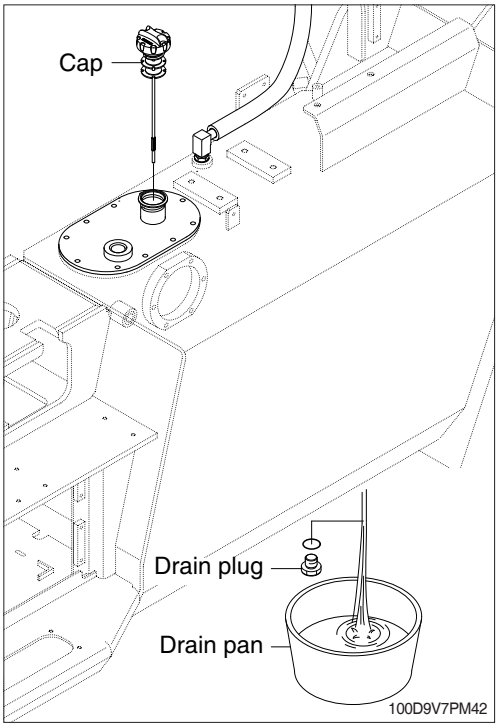

21) REPLACEMENT OF THE SUCTION STRAINER

(1) Remove the tank flange by loosening the mounting bolt.

(2) Remove the suction strainer from the tank.

(3) Replace the suction strainer with a new one.

(4) Install the flange on the tank.
· Tightening torque : 2.5±0.5 kgf·m (18±3.6 lbf·ft)

(5) Assemble with reverse order of disassembly.

※ **Be sure to install a new gasket.**

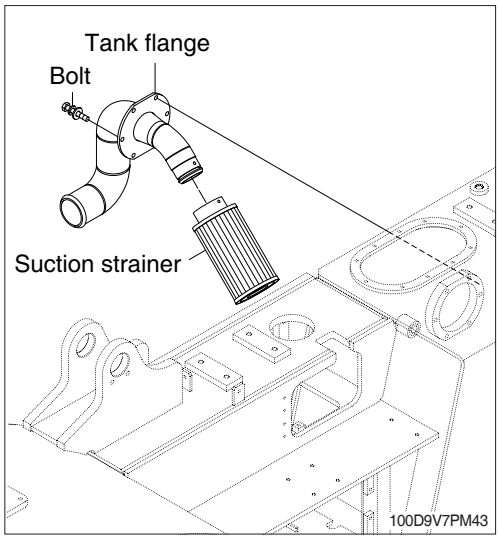

22) REPLACEMENT OF ELEMENT IN HYDRAULIC TANK AIR BREATHER

(1) Loosen the cap and relieve the pressure in the tank.

(2) Loosen the bolt and remove the cover.

(3) Pull out the element.

(4) Replace the element with a new one.

(5) Reassemble by reverse order of disassembly.
· Tightening torque : 0.8 kgf·m (5.8 lbf·ft)

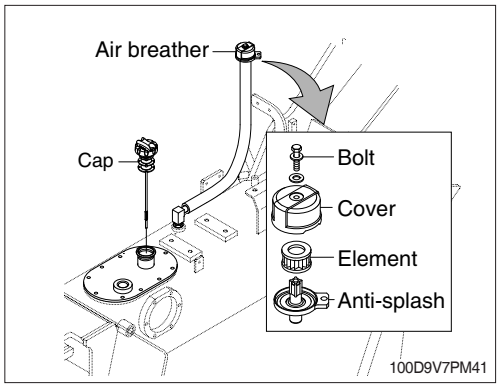

23) REPLACEMENT OF THE RETURN FILTER

(1) Clean the dust around flange of the return filter.

(2) Loosen the bolt and remove the tank flange with the return filter.

(3) Unscrew the return filter.

※ **Using a strap wrench, if necessary.**

(4) Replace the filter with a new one.

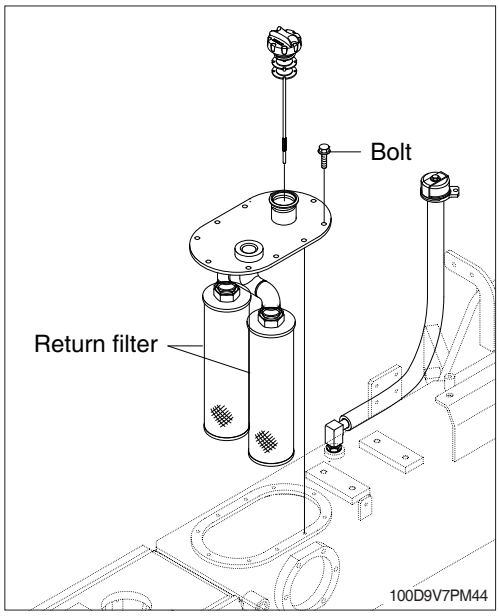

24) CLEANING THE LINE FILTER

(1) Relieve the pressure in the brake system by pushing the brake pedal 2~3 times with starting switch ON position.

(2) Remove the line filter from the cutoff valve.

(3) Loosen the cap (f).

(4) Remove the element (c).

(5) Clean the filter with hydraulic oil and dry using a compressed air.

※ **Replace the O-ring (e) or gasket (d) with a new one if damaged.**

(6) Replace the element with a new one after clean with hydraulic oil and dry using a compressed air if needed.

(7) Tighten the cap (f) with specified torque.
· Tightening torque : 15.3 kgf · m (111 lbf · ft)

(8) Install the line filter to the cutoff valve with specified torque.

※ **Take care of the direction of the line filter.**
· Tightening torque : 6.1 kgf · m (44.1 lbf · ft)

(9) Operate the engine a few minutes and inspect for leaks at the line filter.

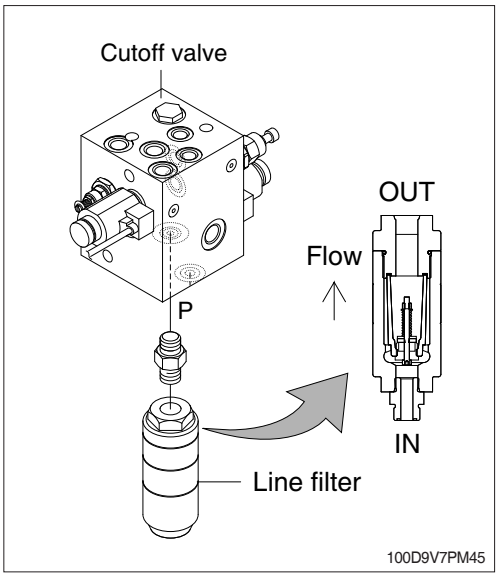

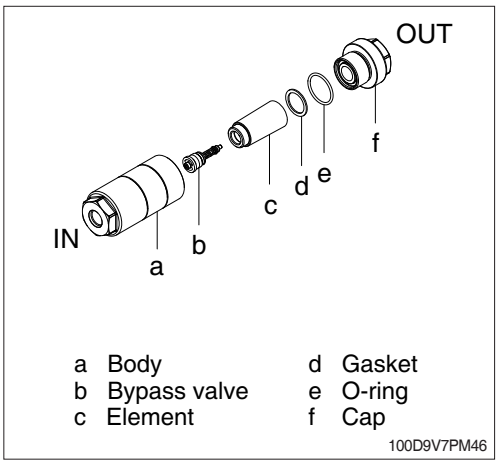

25) LUBRICATE RCV LEVER

Remove bellows and grease the joint (A) and the sliding parts (B).

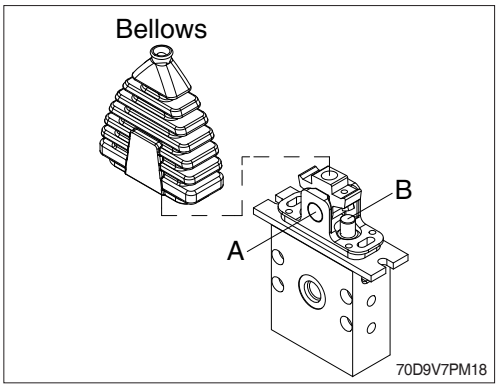

26) TIRE PRESSURE

(1) Inappropriate tire pressure is a primary cause for tire damage. Insufficient tire pressure will damage internal carcass of tire. Repeated excessive bending will damage or break the carcass. Excessive pressure will also cause premature damage of tire.

(2) Recommended tire pressure (When tire is cooled)

Model	Size	Pressure
100D-9V	9.00-20-14PR	7.5 kgf/cm^2 (110 psi)

(3) Continuous operation will produce heat and increase pressure on tire. But such phenomenon was already taken into account when designing a tire. Do not try to remove normally increased air because tires may be crushed or overinflated.

(4) The three major causes for excessive heat and pressure of tire are insufficient pressure, excessive load and overspeed. Avoid excessive load and overspeed in order to keep tires in good shape.

⚠ **Do not inflate tires using flammable gases or alcohol injector.**
This cause explosion or personal injury.

⚠ **Inflate tires at the pressure level recommended by the manufacturer, and check periodically pressure and wear of tires.**

⚠ **When replacing the inflated tire, do not stand near the tire.**

※ **Check the tire when the tire is at normal temperature and the truck is not loaded.**

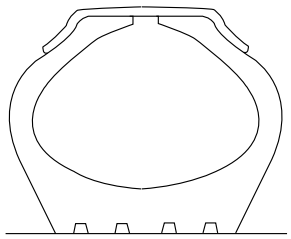

Normal

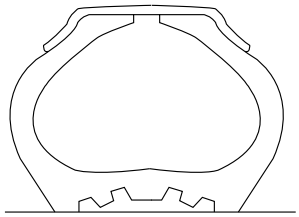

Too low pressure

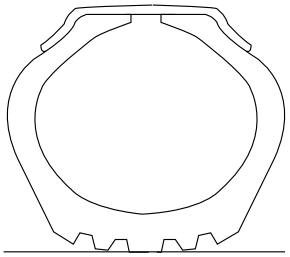

Excess pressure

73036MI10

⚠ Do not use recycled wheel parts.

⚠ When removing lockering or inflating tire, use safety cable or chain to ensure safety.
Be sure to bleed air before removing lockering. Never inflate tires unless the lockering is assembled in its place.

※ Avoid the followings when traveling.

① Rubbing tires against road bank or rack at cargo-unloading spot.
② Tires slippage during working.
③ Abrupt starting of the truck.
④ When oil, grease or gasoline smeared on tire, clean those. Otherwise it may cause of permanent deformation.

27) REPLACEMENT OF TIRE

⚠ Disassembly, reassembly, replacement and repair of tire requires special skills and equipment. Contact a tire repair shop.

(1) Tires to be replaced

① Tires with broken or bent bead wires
② Tires exposed more than 1/4 of carcass fly.
③ Tires whose carcass is damaged more than 1/3 of the tire width.
④ Tires which show fly separation.
⑤ Tires which has a radial crack near the carcass.
⑥ Tires which are judged to be unsuitable for use because of deformation or damage.

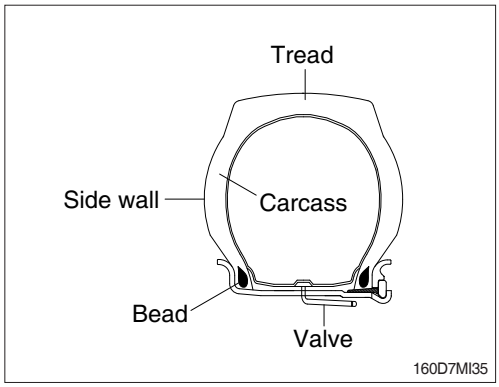

(2) Separation of tire

① After moving the truck to flat ground, lower the fork to the ground and pull the parking brake lever to lock position.

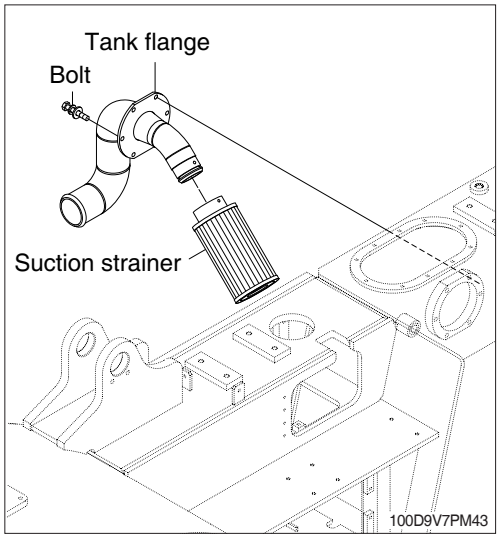

② Loosen slightly all wheel mounting.
· Tools : Socket 32mm
Torque wrench
Extension bar
③ Lift the truck with a jack.
④ Loosen all wheel mounting nuts and replace the tire.

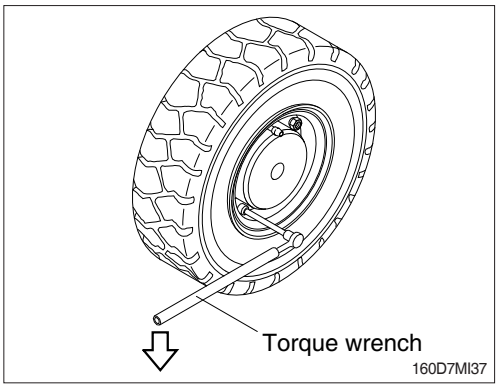

(3) Direction of tire to be installed

① Be careful that the valve should be facing the outside.

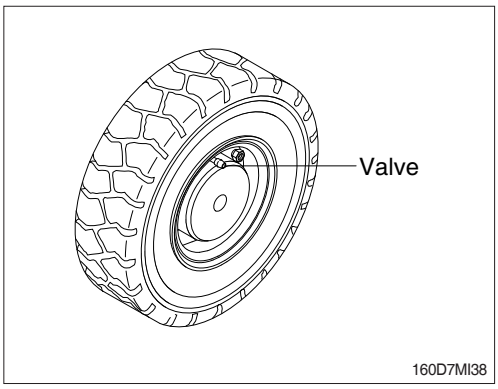

(4) Mounting of tire

① Lightly tighten nuts as shown in the illustration.
② Lower the jack after tire is replaced.
③ Tighten nuts according to the specified tighten torque.
· Tightening torque : 66.3±6 kgf · m
(480±43.4 lbf · ft)

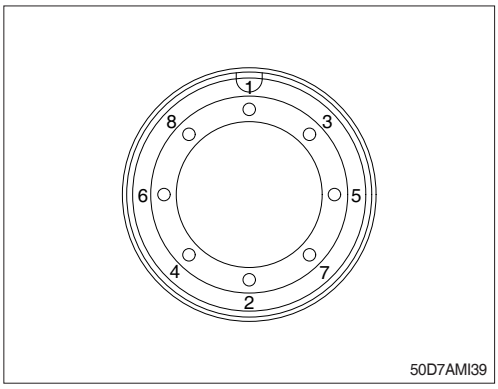

28) STORING TIRES AFTER REMOVAL

As a basic rule, store the tires in a warehouse which unauthorized persons cannot enter. If the tire are stored outside, always erect a fence around the tires and put up "No Entry" and other warning signs that even young children can understand.

Stand the tire on level ground, and block it securely so that it cannot roll or fall over.

If the tire should fall over, get out of the way quickly. The tires for industrial truck are extremely heavy, so trying to hold the tire may lead to serious injury.

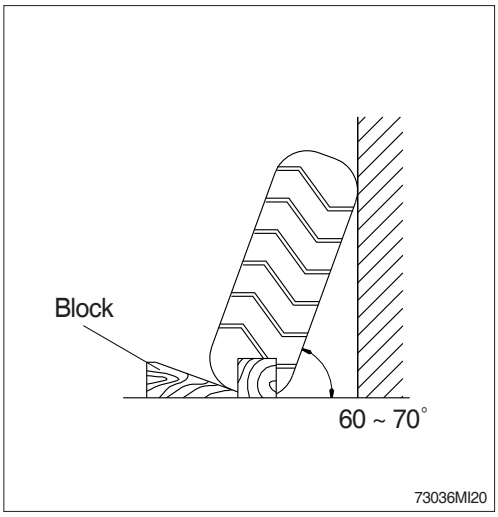

29) CHECK TRANSMISSION OIL LEVEL

The oil level check must be carried out as follows;

(1) Oil level check (weekly).

(2) At horizontally standing the truck.

(3) Transmission in neutral position.

(4) In cold start phase, the engine must be running about 2~3 minutes at idling speed, and the marking on the oil dipstick must then be lying above the cold start mark COLD.

(5) Check oil level at operating temperature of the transmission (about 80~90˚C) and the engine idling speed.

① Loosen oil dipstick by counterclockwise rotation, remove and clean it.

② Insert oil dipstick slowly into the oil level tube until contact is obtained, and pull it out again.

③ On the oil dipstick, the oil level must be lying in the zone HOT.

④ Insert the oil dipstick again, and tighten it by clockwise rotation.

⚠ When checking, apply the parking brake and fix the tires with blocks.

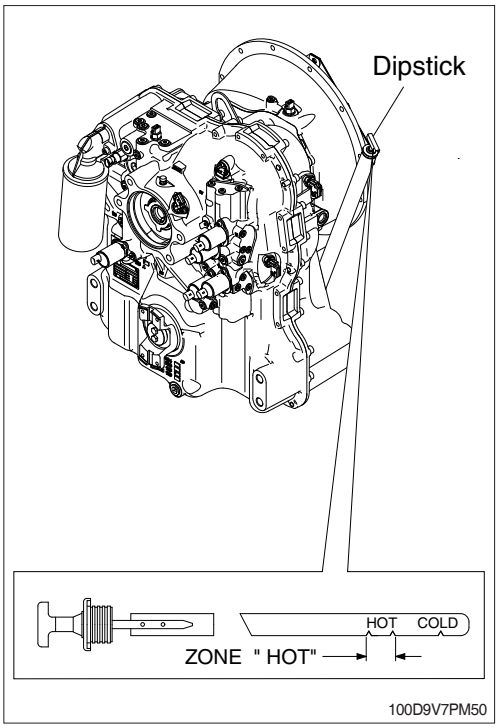

30) REPLACEMENT OF TRANSMISSION OIL AND FILTER ELEMENT

(1) Operate the truck for a few minutes in order to warm the transmission oil.

(2) Move the truck to flat ground. Lower the forks to the ground and slightly apply downward force.

(3) Apply the parking brake and stop the engine.

(4) Open transmission air breather to relieve internal air pressure.

(5) Remove the transmission drain plug. Allow the transmission oil to drain into a suitable container.

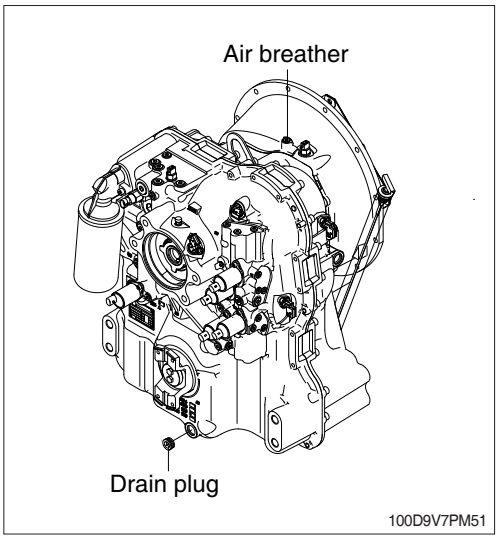

(6) Remove the transmission oil filter.
Dispose of the used transmission oil filter properly.

(7) Clean the filter mounting base. Remove any part of the filter gasket that remains on the filter mounting base.

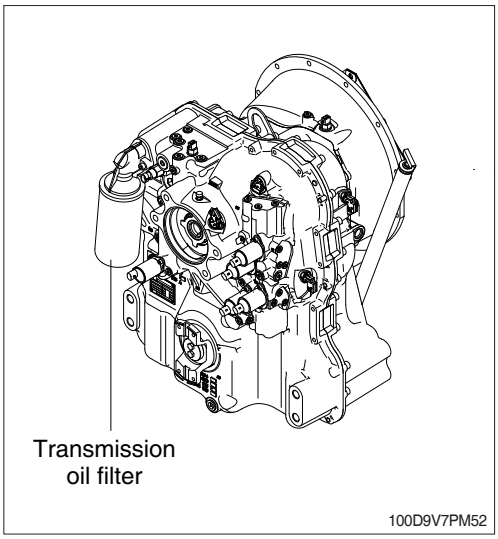

(8) Apply a light coat of oil to the gasket of a new transmission oil filter.

(9) Install the new transmission oil filter.
Screw the filter in until contacts with the sealing surface is obtained and tighten it now by hand about 1/3 to 1/2 turn.

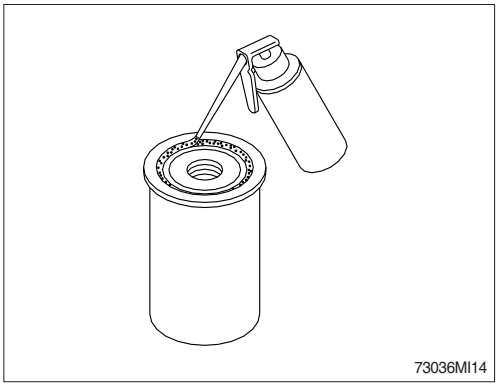

(10) Mount the drain plug of the transmission after cleaning it.

(11) Fill the oil through the dipstick inlet and check if the oil is at the appropriate level.

(12) The proper oil amount is 18 liters (4.8 U.S. gallons)

⚠ As the truck is hot after operation wait until the temperature has dropped.

⚠ It is imperative to pay attention to absolute cleanliness of oil and filter.
Binding is in any case the marking on the oil dipstick.

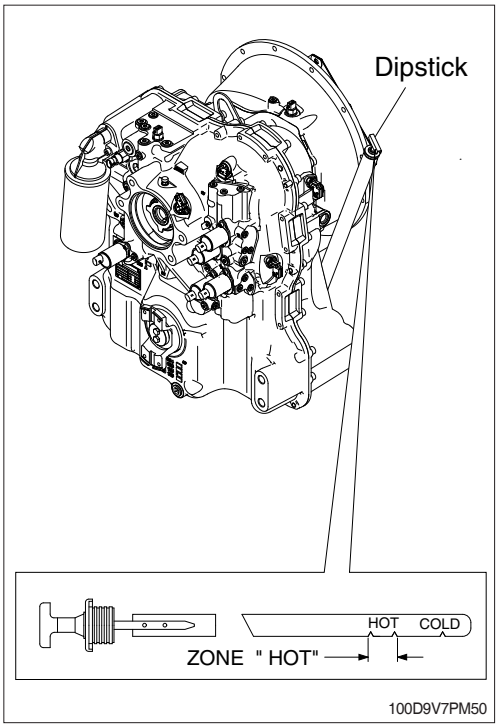

31) CLEANING TRANSMISSION AIR BREATHER

(1) Remove dust or debris around the air breather.

(2) Remove the air breather and wash it with the cleaning oil.

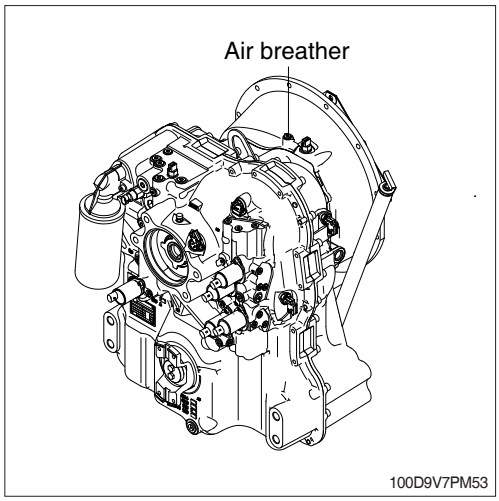

32) CHECK AND SUPPLYING AXLE OIL

(1) Move the truck to flat ground.

(2) Open the axle air breather to relieve internal air pressure.

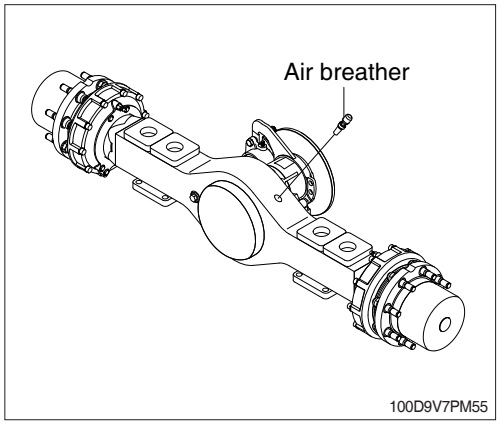

(3) Remove the plug and check the oil amount.
If the oil level is at the hole of the plug, it is normal.

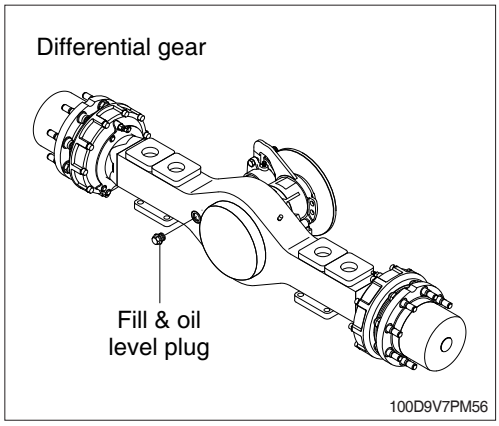

(4) If the oil level is below the plug hole, supply oil through a plug hole.

⚠ **When checking the oil level, engage the parking brake and fix the tires with blocks.**

⚠ **As the truck is hot after operation, wait until the temperature has dropped.**

※ **Set the plug of planetary gear in parallel to the ground.**

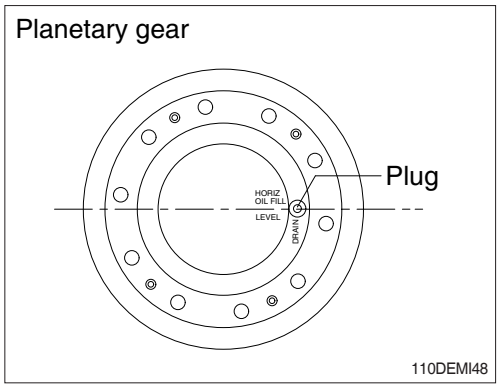

33) CHANGE THE AXLE OIL

(1) Place a case under drain plug to catch oil.

(2) Remove the air breather to relieve internal pressure.

(3) Drain oil the differential gear.

① Remove the refilling plug and remove the drain plug to drain oil off.

② Wash drain plug and install it.

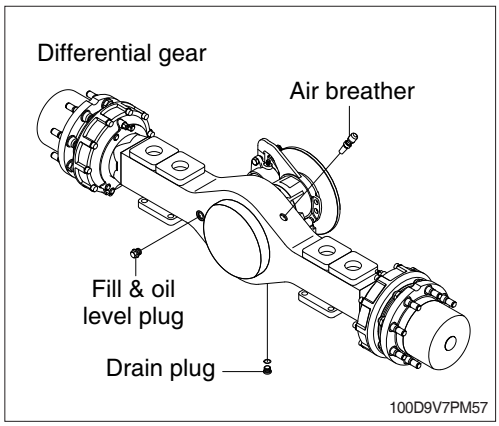

(4) Drain oil planetary gear.

① Drain oil by removing drain plug.

※ **The drain plug should be facing the ground.**

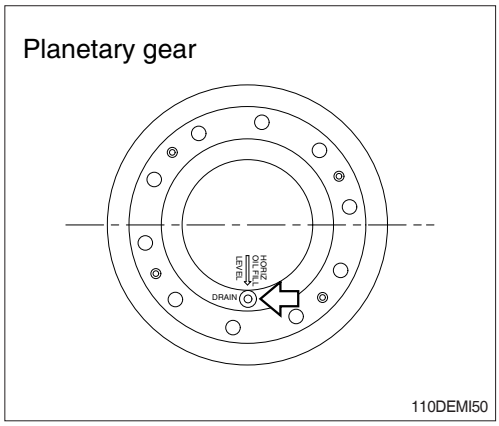

(5) After draining, put the drain plug of planetary gear in parallel to the ground.

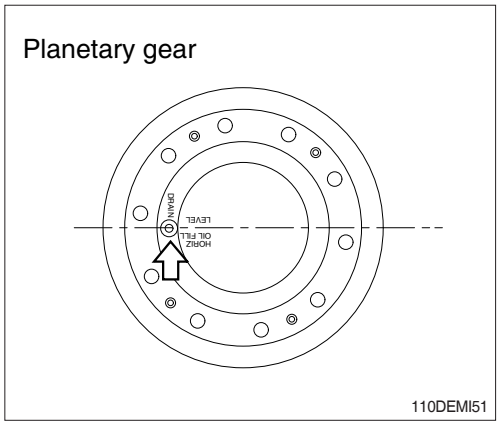

(6) Supply oil into the differential gear and the planetary gear.
  · Oil amount : 13 ℓ (3.43 U.S. gal)

(7) Supply oil until it overflows from the oil filler, then install the plug.

⚠ **As the truck is hot after operation, wait until the temperature has dropped.**

※ **If a work requires frequent use of brake, replace it earlier than normal change interval.**

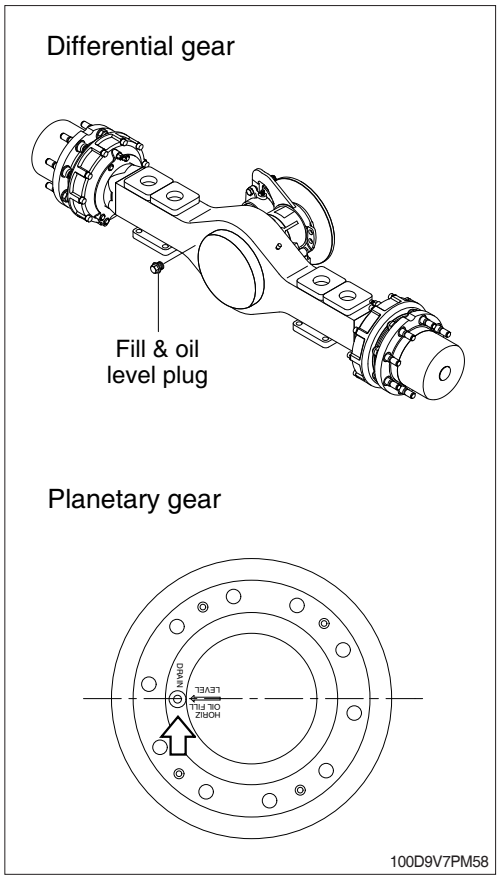

34) CLEANING AXLE BREATHER

(1) Remove dust or debris around the breather.

(2) Remove the breather and wash it with a cleaning oil.

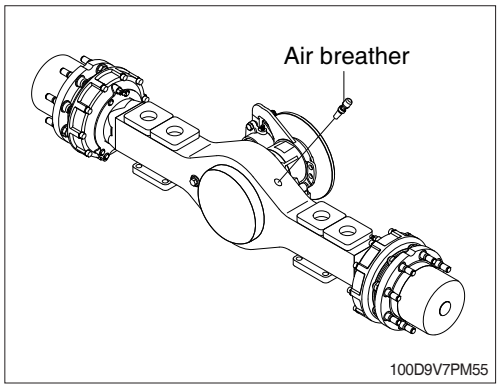

35) BRAKE COOLING OIL AND STRAINER

(1) Check the oil level.

(2) If oil level is near or under the lower limit, add oil immediately.

(3) Change oil and strainer completely every 1000 hours operation.

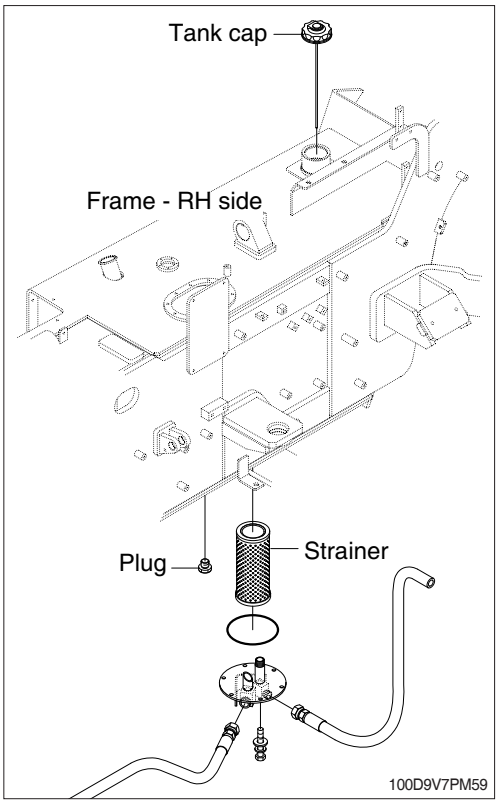

36) LUBRICATION

(1) Supply grease through the grease nipple, using the grease gun.

(2) After lubricating, clean off spilled grease.

⚠ Apply the parking brake and fix the front and rear tires with blocks.

⚠ Set the mast and forks in a stable position.

(3) Lubrication points

① Fork Adjust cylinder : 2EA

② Fork : 2EA

③ Tilt cylinder : Left/Right, 2EA

④ Lift chain : 2EA

⑤ Mast support : Left/Right, 2EA

⑥ Steering axle : 6EA

⑦ Drive shaft spline : 3EA

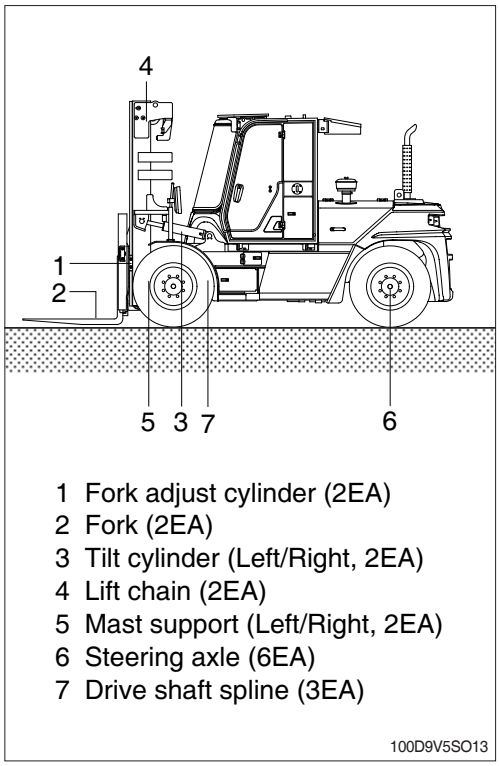

37) FORK REPLACEMENT

① Lower the fork carriage until the fork is approximately 25 mm (1 in) from the floor.

② Release the fork retainer and remove the cover. Slide one hanger bar at a time out of carriage assembly.

③ Remove only one fork at a time.

※ On a large fork, it may be necessary to use a block of wood.

④ Reverse the above procedure to install the forks.

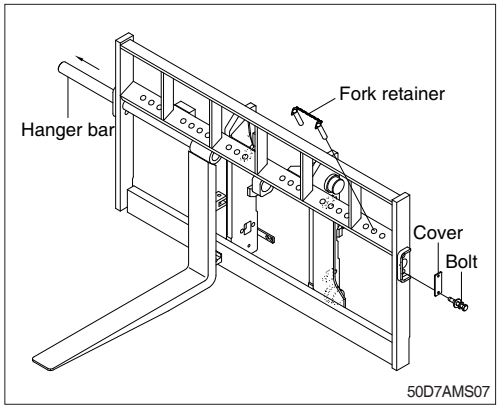

38) MAINTENANCE OF WORK EQUIPMENT

(1) Lubricate to each point of working device.
Lubricate the grease to grease nipple in accordance with lubrication intervals.

No.	Description	Qty
A	Fork adjustment cylinder pin	2
B	Fork shaft	1
C	Tilt cylinder pin	2
D	Load chain	2
E	Mast support pin	2
F	Chain sheave pin	2

※ **Shorten lubricating interval when working in the water or dusty place.**

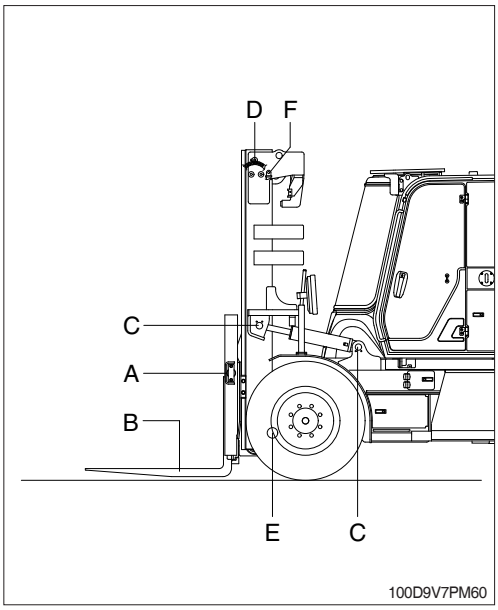

(2) Check for wear and tear of work equipment pins and bushings.

(3) Check for damage of forks and mast linkage part.

※ **Check daily and lubricate the fork positioner hanger bar and bottom plate where the fork is contacted, or the forks may vibrate temporarily while positioning.**

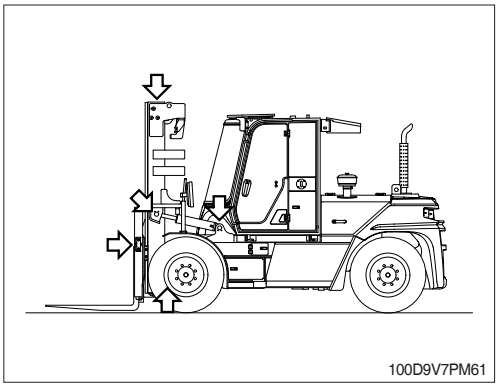

(4) Dust seal are mounted on the rotating part of working device to extend the lubricating interval.

※ **Mount the lip to be faced out side when replace the dust seal.**

※ **If it is assembled in wrong direction, it will cause fast wear of pin and bushing, and create noise and vibration during operation.**

※ **Make sure the seals are not damaged or deformed.**

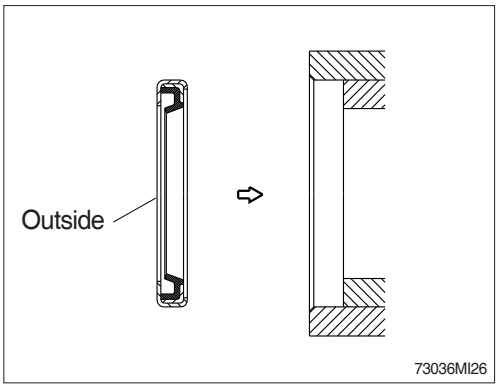

39) WORK EQUIPMENT SUPPORT

When carrying out inspection and maintenance with the forks raised, fit a stand under the forks securely to prevent the work equipment from coming down. In addition, set the work equipment control levers to the hold position.

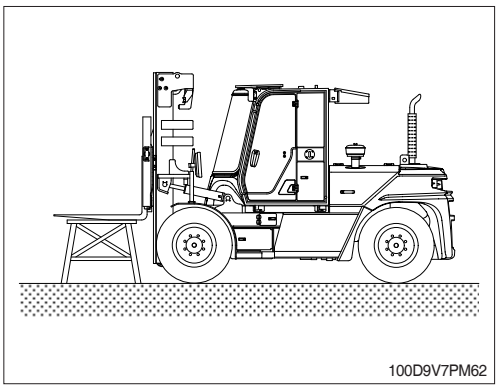

1) WIRING, GAUGES

Check regularly and repair loose or malfunctioning gauges when found.

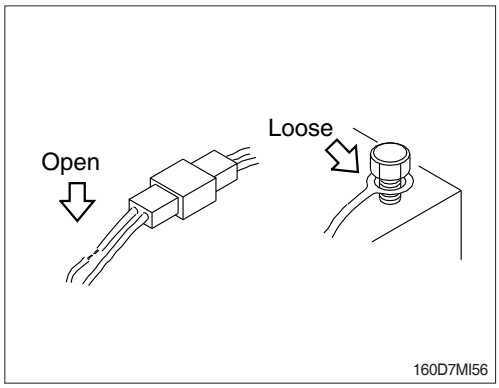

2) WELDING REPAIR

Before start to welding, follow the below procedure.

(1) Shut off the engine and remove the starting switch.

(2) Disconnect ground cable from battery by master switch.

(3) Before carrying out any electric welding on the machine, the battery cables should be disconnected and the connectors pulled out of the electronic control units (MCU, ECU, TCU, cluster etc).

(4) Connect the earth (ground) lead of the welding equipment as close to the welding points as possible.

※ **Do net weld or flame cut on pipes or tubes that contain flammable fluids. Clean them thoroughly with nonflammable solvent before welding or flame cutting on them.**

⚠ **Do not attempt to welding work before carry out the above.**
If not, it will caused serious damage at electric system.

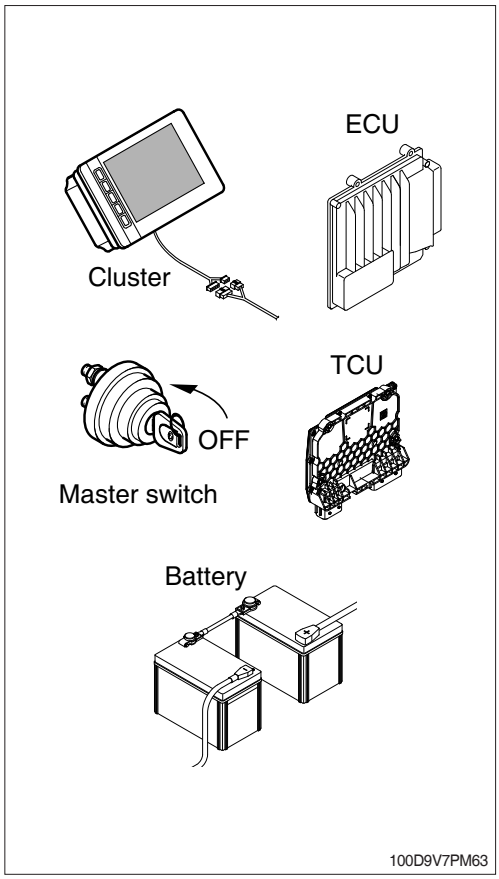

8. AIR CONDITIONER AND HEATER

1) CLEANING AND REPLACING FILTER

※ Always stop the engine before servicing.

(1) Open the door, loosen the wing bolt and remove the recircular plenum assembly.

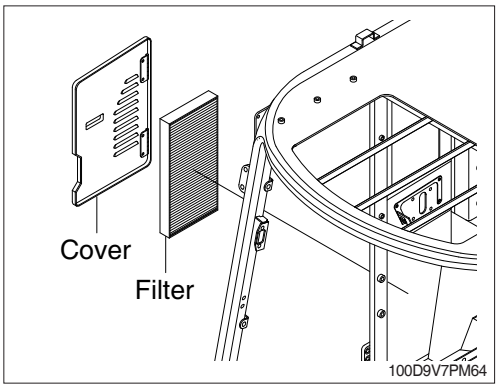

(2) Clean the recircular plenum using a pressurized air (Below 2 kgf/cm^2, 28 psi).

△ **When using pressurized air, be sure to the safety glasses.**

(3) Inspect the filter after cleaning. If it is damaged or badly contaminated, use a new filter.

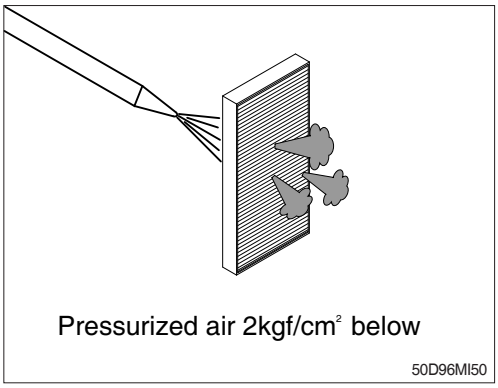

2) PRECAUTIONS FOR USING AIR CONDITIONER

(1) When using the air conditioner for a long time, open the window once every one hour.

(2) Be careful not to overcool the cab.

(3) The cab is properly cooled if the operator feels cool when entering there from outside(About 5˚C lower than the outside temperature).

(4) When cooling, change air occasionally.

3) CHECK DURING SEASON

Ask the service center for replenishment of the refrigerant or other maintenance service so that the cooling performance is not damaged.

4) CHECK DURING OFF-SEASON

Operate the air conditioner 2 or 3 times a month (Each for a few minutes) to avoid loss of oil film in the compressor.

5) REFRIGERANT

(1) Equipment contains fluorinated greenhouse gas.

Model	Type	Quantity	GWP
100D-9V	HFC-134a	0.55 kg (1.21 lb)	787 CO_2 eq.

※ GWP

Global warming potential (GWP) is a measure of how much heat a gas traps in the atmosphere relative to that of carbon dioxide (CO2). GWP is calculated in terms of the 100-year warming potential of 1 kg of a greenhouse gas relative to 1 kg of CO2.

(2) Envior

The air conditioning system of the machine is filled with HFC-134a refrigerant at the factory.
HFC-134a refrigerant is a flourinated greenhouse gas and contributes to global warming.
Do not release refrigerant into the environment.

(3) Safety precautions

Work on the air conditioning system must only be performed by a qualified service technician.
Do not attempt to preform work on the air conditioning system.
Wear safety goggles, chemical resistant gloves and appropriate personal protective equipment to protect bare skin when there is a risk of contact with refrigerant.

(4) Action in case of exposure

① Eye contact / Limited skin contact
Rinse with warm water and apply a light bandage. Seek medical attention immediately.

② Extensive skin contact
Rinse with warm water and carefully heat the area with warm water or warm clothing.
Seek medical attention immediately.

③ Inhalation
Leave the area and find fresh air. Seek medical attention immediately.

9. REPLACEMENT AND CHECK

1) WIRING, GAUGES

Check regularly and repair the loose or malfunctioning gauges when found.

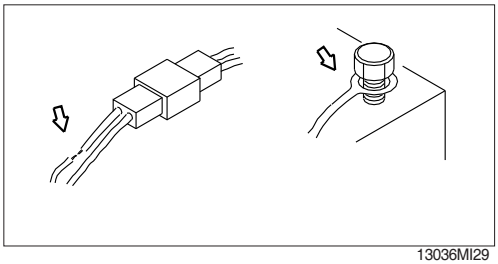

13036MI29

2) BATTERY

(1) Clean

① Wash the terminal with hot water if it is contaminated, and apply grease to the terminals after washing.

⚠ The battery gas can explode. Keep sparks and flames away from the batteries.

⚠ Always wear protective glasses when working with the batteries.

⚠ Do not stain clothes or skin with the electrolyte as it is acid.
Be careful not to get the electrolyte in the eyes. Wash with clean water and go to the doctor if it enters the eyes.

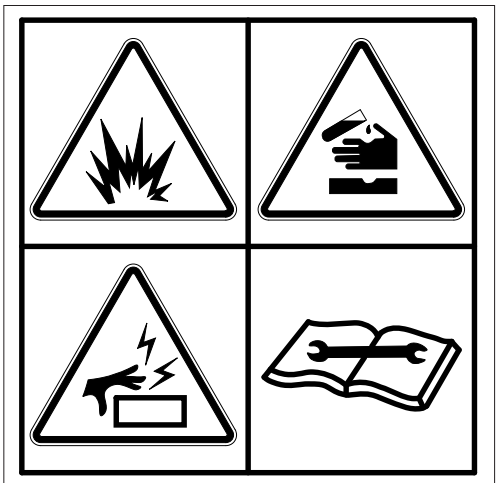

36070FW05

(2) Recycle

Never discard a battery.
Always return used batteries to one of the following locations.

- A battery supplier
- An authorized battery collection facility
- Recycling facility

(3) Removing and installing

① Remove the lead from the ground side (Normally the (-) terminal side) of the battery. It is dangerous to let a tool, etc., touch the (+) terminal and the body at the same time, since this causes a spark.

② When remounting, connect the ground connection last

⚠ Do not allow tools to touch the (+) terminal and the body of the truck at the same time. This can cause sparking and explosion.
When reinstalling the cables after replaced the battery, pay close attention to maintaining the same alignment state of the cables as it was when supplied. Otherwise, the machine can be exposed to the fire hazards.

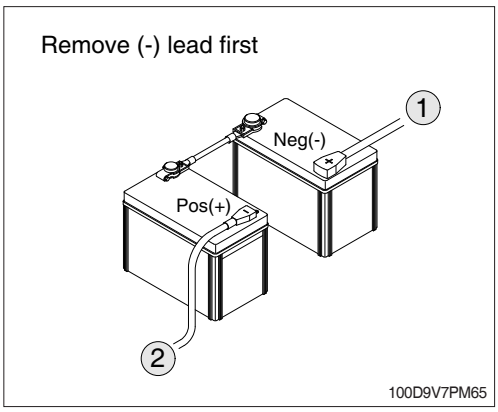

100D9V7PM65

⚠ Prior to reinstall the cable, inspect in detail and confirm the condition of the cables and replace it when the cables possess any kind of abnormal damages such as cracking and wear out of the cable sheath that make you feel somedangerous to use it. Do consult an expert about this matter when you are not able to judge its condition. It is strongly recommended to keep the surroundings of the battery cables clean so that the machine can be freed from the risk of firing by eliminating the flammable contaminations such as oil, dust and etc. acting as a fire developer. Dispose of the old battery in locally approved manner.

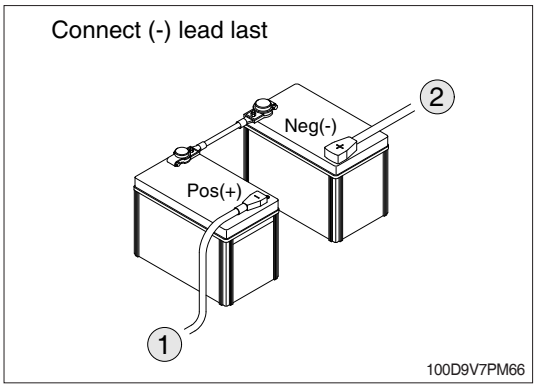

3) TRANSMISSION OIL

⚠ Do not touch hot components or allow hot oil to contact your skin.

(1) Transmission oil

Park the truck in a level place and lower the forks. Apply the parking brake. The gear selector lever in neutral position.

(2) Oil level check

① At the engine idling speed.

② Open inspection plate, and oil level can be checked using the dipstick.

③ Add oil through the oil filler plug if necessary.

④ Always check the oil level using the dipstick after add oil.

(3) Change

① Remove the drain plug.

② When changing oil, remove the filter and replace with a new one.

⚠ OSHA approved eye protection rated for 2 kgf/cm² (30 psi) is required for the air cleaning operation.

· Blow dry compressed air from the inside of strainer to outside and install when completely dry.

· Dispose of the old oil in locally approved manner.

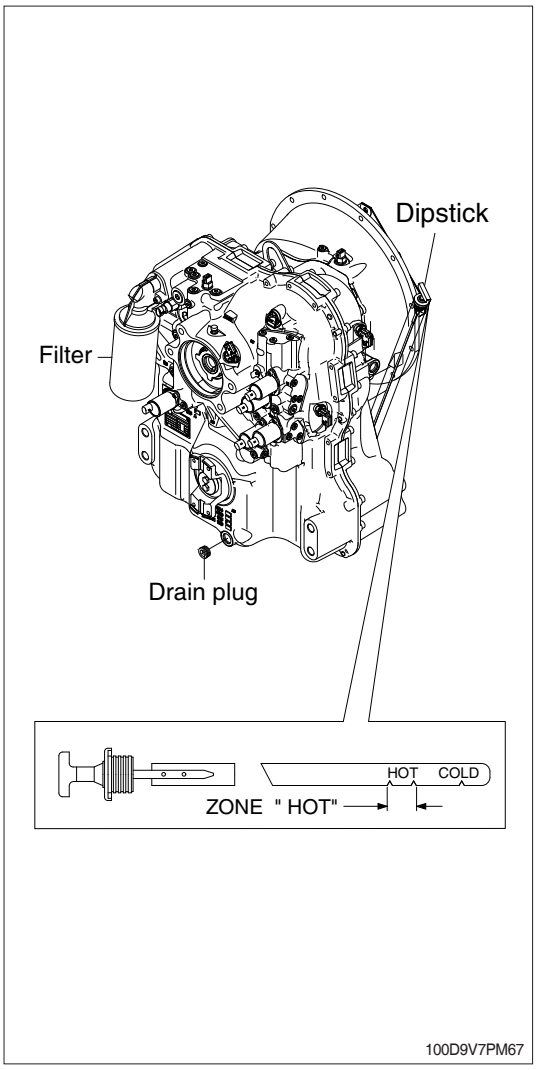

4) COOLING SYSTEM

(1) Radiator fins cleaning

Remove dust between the radiator fins with compressed air. The steam or water may be used instead of compressed air. Air pressure should be less than 2 kgf/cm^2 kPa (30 psi). The nozzle of the cleaning device should be held about 50 mm (2 in) from the radiator fins. Also, check the rubber hose connected to the radiator. Replace if cracked or deteriorated. Check that the hose clamps are tight.

⚠ Be sure to keep the air or steam nozzle at right angles to the radiator. Wear the safety glasses and a face shield when using the compressed air.

(2) Radiator cleaning

① Close the drain valves and add clean, soft water (City water, etc.) through the water filler. Add the radiator cleaner and run the engine at idling speed for 15 minutes.

② Stop the engine and drain water from the drain valves.

③ Add clean water and run at idling speed (5 to 10 minutes). Then stop the engine and drain water.

④ Close the drain valves and fill the radiator with clean water.

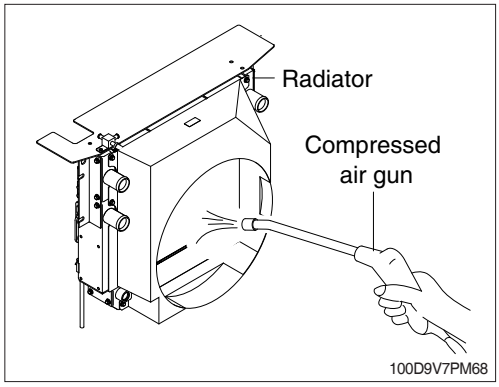

⚠ For low temperatures, add antifreeze. (See the cold weather operation for details). When not using antifreeze, add anticorrosive compound. Park the truck on level ground and clean the radiator.

※ Dispose of old antifreeze mixture in locally approved manner.

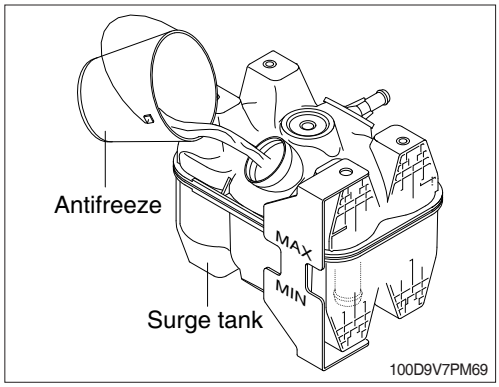

5) TIRE REPLACEMENT

① Park the truck in a safe and level place suitable for changing the tire. Then lower the forks, stop the engine, and apply the parking brake.

⚠ **The tires are under high inflation pressure, so failure to follow the correct procedures, when changing or servicing the tires and rims could cause the tire to explode, causing serious injury or damage. The tires and rims should always be serviced or changed by trained personal using the correct tools and procedures. For details of procedures, contact your HYUNDAI dealer. Wear safety glasses and a face shield when using compressed air.**

② Block the tire at the opposite corner from the tire to be replaced.

③ Loosen the lug nuts slightly with a lug nut wrench.

④ Jack up the truck to raise the tire from the ground, then remove the lug nuts and take off the tire.

※ **Points to fit jack when jacking up**

Front tires: Bottom of outer mast or bottom of the frame.

Rear tires: Bottom of counterweight or bottom of the rear axle.

⚠ **When jacking up the truck, always check carefully that the jack does not come out of position. When jacking up the truck, never go under the truck. For wheels using a separate type rim, check first that the rim nut is not loose before loosening the lug nuts. Be careful not to mistake the rim nuts and lug nuts.**

When assembling separated type rims with bolts and nuts, check any damage and tighten them to the specified tightening torque. Change the bolts and nuts with new ones after using twice for your safety.

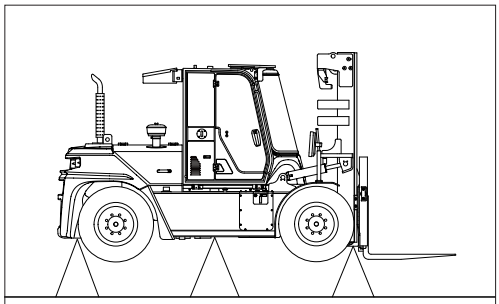

100D9V7PM70

⑤ Replace the tire and tighten the lug nuts partially. The mounting faces of the wheel, lug nuts and wheels must be free from any dirt or lubricant of any kind.

⑥ Tighten the lug nuts on opposite sides in turn,
and check that there is no play in the wheel.

⑦ Lower the jack to lower the truck to the ground, then tighten the lug nuts to the specified tightening torque (For details, see service data).

⑧ Check and adjust the inflation pressure.

Tire inflation pressure : For details, see page, 5-3 CHECK BEFORE STARTING ENGINE.

⚠ **Precautions for adjusting the inflation pressure when repairing a puncture.**

※ **The tires used on the forklift trucks have a high inflation pressure, so any cracks or deformation of the rim are extremely dangerous. When adjusting the inflation pressure, do not raise the pressure above the correct level under any circumstances. If the pressure of the compressor is not adjusted beforehand, the pressure inside the tire will rise to the maximum air pressure of the compressor, and this may cause a serious accident. Therefore, always be extermely careful when carrying out this work.**

6) FUSE AND RELAY REPLACEMENT

(1) Fuse box

COVER P/N : 2YFJ-15852

AIRCON MAIN
에어컨
20A

20A 30A

FUSE BOX
IG 메인
60A

5A 5A 10A 10A 15A

HORN/ CAB TILT 경음기/ 캐빈 틸팅	STOP/ TURN LAMP 정지등/ 방향지시등	RMCU/ MONITOR 알엠씨유 /모니터	CLUSTER 클러스터	TCU B+ 미션 제어기 상시 전원	DEF SENSOR DEF 센서	DEF SUPPLY MODULE DEF 서플라이 모듈	DEF LINE HEATER DEF 라인 히터	AIRCON B+/ POW.IND 에어컨 상시전원/ 전원표시등	ROOM LAMP /RADIO 실내등/ 라디오
10A	10A	10A	5A	10A	10A	15A	20A	5A	10A
CLUSTER 클러스터	FUEL HEATER 연료 히터	ECM IG 엔진 제어기 IG	TCU IG 미션 제어기 IG	HEAD LAMP 전조등	REAR WORK LAMP 후방 작업등	TAIL/ BEACON LAMP 미등/ 경광등	BACK UP/ TOP WIPER 후진등/ 탑 와이퍼	WIPER MOTOR 와이퍼 모터	MONITOR /CAMERA 모니터/ 카메라
10A	20A	10A	10A	10A	10A	10A	10A	10A	10A
MIRROR HEATER/ W/ BUZZER 열선미러/ 경고 부저	AIR COMP/ CONDENSER 에어 콤프레서 /콘덴서	ATT CUT/ FINGERTIP 어태치 컷/ 핑거팁	CONVERTER 컨버터	PARK SOL 주차 솔레노이드	SENSOR/ CONTROLLER 센서/ 제어기	SEAT HEATER 열선 시트	START RELAY 시동 릴레이	ECM B+ ECM B+	
10A	25A	10A	10A	5A	5A	10A	10A	30A	

2YFJ-15852

(2) Relay box

COVER P/N : 2DFQ-10312

배선 방향
WIRE DIRECTION

DEF HEATER2 RELAY 히터재생 릴레이2 CR-62	AUTO-PARK RELAY 자동 주차 릴레이 CR-37	WIPER Hi RELAY 와이퍼 Hli 릴레이 CR-4	PREHEAT AUX RELAY 보조 예열 릴레이 CR-42	NEUTRAL RELAY 중립 릴레이 CR-5
DEF HEATER3 RELAY 히터재생 릴레이3 CR-63	DEF HEATER1 RELAY 히터재생 릴레이1 CR-61	WIPER Lo RELAY 와이퍼 Lo 릴레이 CR-26	WASHER PUMP RELAY 와셔 펌프 릴레이 CR-38	START LOCK RELAY 시동 잠금 릴레이 CR-36

2DFQ-10312

① Turn the starting swich OFF.

② Open the cover of the fuse box, and replace fuses inside (To open the cover of the fuse box, push the side of the cover lightly with a finger, and pull the cover forward to remove it.)

⚠ When replacing the fuse, check the relationship between the fuse and the electrical components it protects. Always replace fuses with a fuse of the same capacity. Always turn the starting switch OFF before replacing any fuse.

7) LAMP BULBS REPLACEMENT

Lamp	Spec (12 V)
Head and turn signal lamp	LED
Clearance lamp	LED
Stop lamp	LED
Backup lamp	LED
Room lamp	10 W
License lamp (option)	5 W
Beacon lamp (option)	LED strobe type
Rear work lamp (option)	LED

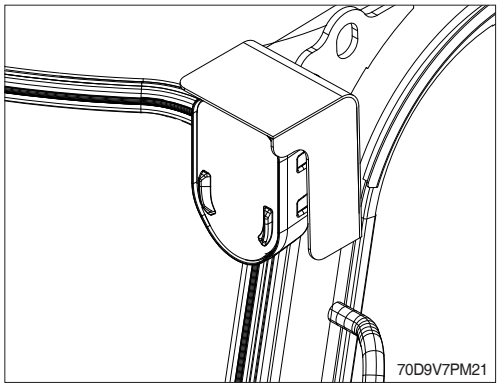

⚠ **After checking that the fuse is not blown and that there is no disconnection in the wiring harness, replace the lamp bulb.**

8) FUNCTIONAL TESTS

You will start the engine to complete the functional tests, so be sure that:

- The parking brake switch is in LOCK position.
- The gear selector lever is in NEUTRAL position.
- Forks are fully lowered to the floor or ground.
- All controls are in neutral or other correct position.
- You are familiar with the safety procedures given in section 5, **Starting and operating procedures**, in this manual.

As you test the following components, be sure they are properly mounted and working correctly.

(1) Horn

Press the horn button to check the horn function. If the horn or any other part does not operate, report the failure and have it repaired before the truck is put into operation.

(2) Hour meter

Start the engine and let it warm up until it runs evenly and accelerates smoothly when you push on the accelerator pedal. Check the hour meter for operation with the engine running. Write the hour meter reading on the PM report form. Report any malfunction or damage.

(3) Indicator lights

Check that all lights are functioning and indicate normal truck operation as described in section 3, **Know your truck**, in this manual.

(4) Service brakes and inching pedal

With the gear selector lever in NEUTRAL and the engine running, push the sevice brake pedal fully down and hold. The brakes should apply before the pedal reaches the floorplate. If the pedal continues to creep downward, report the failure immediately. Do not operate the truck until the brakes are repaired. Perform the same check with the inching pedal. (Additional braking/inching checks will follow).

(5) Parking brake

Check the function of the parking brake. Release, then reapply. To check parking brake holding capability, park the lift truck on a grade and apply the parking brake. The parking brake should hold a lift truck with rated load on a 15% grade.

⚠ **Do not operate a lift truck if the service or parking brakes are not operating properly.**

(6) Lift mechanisms and controls

Pull back on the tilt control lever and hold until the mast reaches the full back tilt position. Push forward on the lever to return the mast to the vertical position. Release the lever.

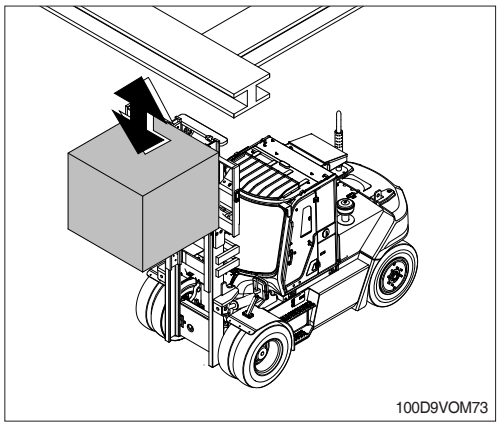

⚠ **Be sure that there is adequate overhead clearance before raising the mast.**

Pull back on the lift control lever and raise the fork carriage to full height. Watch the mast assembly as it rises. Release the lever.

If the maximum fork height is not reached, this indicates there is an inadequate(low) oil level in the hydraulic sump tank or severe binding within the mast.

Push forward on the lift control lever. Watch the mast as it lowers. When the forks reach the floor, release the lever.

All movements of the mast, fork carriage, and lift chains must be even and smooth, without binding or jerking. Watch for chain wobble or looseness; the chains should have equal tension and move smoothly without noticeable wobble.

(7) Auxiliary controls (Option)

If your lift truck is equipped with an attachment, test the control lever for correct function and briefly operate the attachment.

(8) Steering system

※ **The steering system, steering axle, and steering linkage on your truck should be inspected periodically for abnormal looseness and damage, leaking seals, etc.. Also, be alert for any changes in steering action. Hard steering, excessive freeplay (Looseness), or unusual sound when turning or maneuvering indicates a need for inspection or servicing.**

Check the steering system by moving the steering handwheel in a full right turn and then in a full left turn. Return the handwheel to the straight ahead position. The steering system components should operate smoothly when the handwheel is turned. Never operate a truck that has a steering system fault.

⚠ **Fasten your seat belt before driving the truck.**

(9) Direction control, braking and inching

※ **Be sure that the travel area is clear in front of the truck.**

① Push firmly on the brake pedal. Release the parking brake. Move the gear selector lever from NEUTRAL to FORWARD.

② Remove your right foot from the service brake pedal and put it on the accelerator pedal. Push down until the truck moves slowly forward. Remove your foot from the accelerator pedal and push down on the service brake pedal to stop the truck. The brakes should apply smoothly and equally.

※ **Be sure the travel area is clear behind the truck.**

③ Put the gear selector lever in the REVERSE travel position. Release the service brake and push down on the accelerator pedal until the truck moves slowly in the reverse direction. Remove your foot from the accelerator pedal and push down on the service brake pedal to stop the truck. The brakes should apply smoothly and equally.

④ Put the gear selector lever is in NEUTRAL position. Press the inching pedal fully down and hold. Depress the accelerator. The truck should not move. Now, with the accelerator still depressed, slowly release the inching pedal until the truck **Inches** forward smoothly and slowly.

※ **Report any problems.**

※ **When you have completed the operational tests, park and leave the truck according to standard shut down procedure as described in section 5 of this manual. Be sure to make a record of all maintenance and operating problems you find.**

9) FLUIDS, FILTERS AND ENGINE ACCESSORIES

To check fluid levels and other components within the engine compartment, unlatch and open the hood to access the engine compartment.

⚠ **To avoid the possibility of personal injury, never work in the engine compartment with the engine running, except when it is absolutely necessary to check or make adjustments. Take extreme care to keep hands, tools, loose clothing, etc., away from the fan and drive belts. Also remove watches, bracelets, and rings.**

(1) Engine accessories

Inspect the engine coolant hoses and fan belt (s). Look for leaking and obvious damage, worn (frayed) condition, breaks, etc. that could cause failure during operation.

(2) Engine air cleaner

Check the engine air cleaner for damage and contamination(excessive dirt build-up and clogging). Be sure that the air cleaner hose is securely connected(not loose or leaking). Fan or cone shaped dust deposite on tube or hose surfaces indicate a leak.

Change or service the air cleaner element every 1500 operating hours, depending upon your application. Service intervals may also be determined by the air restriction indicator.

(3) Battery

Inspect the battery for damage, cracks, leaking condition, etc.. If the terminals are corroded, clean and protect them with HYUNDAI battery saver(Available from your HYUNDAI dealer).

⚠ EXPLOSIVE GASES : Do not smoke or have open flames or sparks near the batteries. An explosion can cause injury or death.

(4) Engine cooling system

To check the engine coolant level open the hood to the engine compartment. Visually inspect the recovery bottle, locate the MAX and MIN marks. The MAX mark indicates maximum level at operating temperature. The MIN mark indicates additional coolant needs to be added to the system.

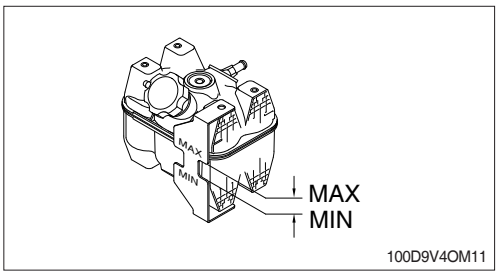

△ A level anywhere between the MAX and MIN marks is normal.

※ Inspect the coolant level in the overflow bottle only.

⚠ Do not remove the surge tank cap when the radiator is hot. STEAM from the radiator will cause severe burns. Do not remove the surge tank cap to check the coolant level.

⚠ Never remove the surge tank cap while the engine is running. Stop the engine and wait until it has cooled. Failure to do so could result in serious personal injury from hot coolant or steam blowout and/or damage to the cooling system or engine.

If the level is low, add a 50/50 mixture of specified coolant and water to the correct level. If you have to add coolant more than once a month or if you have to add more than one quart at a time, check the coolant system for leaks.

- Check the engine oil for presence of coolant leaking into the engine.
- Inspect the coolant for condition. Look for excessive contamination or rust or oil in the coolant solution.
- Check the PM time interval for need to change the coolant.
- Check the condition of surge tank cap rubber seal and surge tank filler neck for damage. Be sure they are clean.
- Check overflow hose for logging or damage.

※ Your lift truck cooling system is filled with a factory installed solution of 50% water and 50% ethylene glycol base permanent type antifreeze containing rust and corrosion inhibitors. You should leave the solution in year around. Plain water may be used in an emergency, but replace it with the specified coolant as soon as possible to avoid damage to the system. Do not use alcohol or methanol antifreeze.

(5) Engine oil and filter

Locate the engine oil dipstick. Pull the dipstick out, wipe it with a clean wiper, and reinsert it fully into the dipstick tube. Remove the dipstick and check the oil level.

It is normal to add some oil between oil changes. Keep the oil level between the High and Low mark on the dipstick by adding oil as required. **Do not overfill**. Use the correct oil as specified under lubricant specification.

It is recommended to:

- Drain and replace the engine crankcase oil initial 50 hours and every 500 operating hours.
- Remove the oil pan drain plug to drain old oil after the truck has been in operation and the engine oil is operating temperature.

⚠ **Engine oil at operating temperature is hot and can cause burns. Beware of splashing oil.**

- Carefully check for leaks after changing oil and installing a new filter.

※ **The time interval for changing engine oil depends upon your application and operating conditions. To determine the correct schedule for your truck, check the engine oil condition regulauly.**

OIL PERFORMANCE DESIGNATION: To help achieve proper engine performance and durability, use only engine lubricating oils of the proper quality. For the diesel engines, HYUNDAI recommends that you use motor oil that meets API service classification CK-4 or better for the diesel engines.

※ **Only use officially sold fuel. Using bad fuel can cause fatal damage to the engine.**

(6) Hydraulic oil tank

Check the hydraulic oil tank oil level. Correct oil level is important for proper system operation. Low oil level can cause pump damage. Over filling can cause loss of oil or lift system malfunction. Hydraulic oil expands as its temperature rises. Therefore, it is preferable to check the oil level at operating temperature (after approximately 30 minutes of truck operation). To check the oil level, first park the truck on a level surface and apply the parking brake.

Put the mast in a vertical position and lower the fork carriage fully down. Pull the hydraulic oil tank cap out, (attached to the filter cap) wipe it with a clean wiper, and reinsert it. Remove the hydraulic oil tank cap and check the oil level. Keep the oil level above the LOW mark on the hydraulic oil tank cap by adding recommended hydraulic oil only, as required. **Do not overfill.**

Check the condition of the hydraulic oil (age, color or clarity, contamination). Change the oil as necessary.

(7) Hydraulic oil and filter change

Drain and change the hydraulic oil every 5000 operating hours. (Severe service or adverse conditions may require more frequent oil change). Replace the hydraulic return filter element at every oil change. Remove, clean, and reinstall the hydraulic suction line screens every 2000 hours. Check for leaks after installation of the filter. Also, check that the hydraulic line connections at the filter adapter are tightened correctly.

(8) Hydraulic oil tank air breather maintenance and inspection

Remove the air breather and inspect for excessive (obvious) contamination and damage. Replace the air breather, per recommended PM schedule or as required by operating conditions.

(9) Transmission oil check

To check the transmission oil locate the dipstick. The dipstick is located on the driver's left hand side under the floor plate near the transmission valve. Before checking, run the engine until the unit is at operating temperature. This is important since transmission oil temperature should be 66~121˚C (150~250˚F), the engine should also be at operating temperature. Apply the parking brake.

With the engine operating at idle and the transmission in NEUTRAL, and the parking brake set, check the oil on the dipstick. Fill, if necessary, to the HOT zone on the dipstick, using the transmission oil recommended by HYUNDAI.

※ **Check the planned maintenance interval (operating hours) or the condition of the oil to determine if the transmission oil needs to be changed.**

10) LUBRICATION

(1) Truck chassis inspection and lubrication

Lubrication and inspection of the truck chassis components, including the steering wheels, steering axle linkage, steering cylinder, and wheel bearings are easier if the truck is raised and blocked up under the frame. Refer to page 7-47 for additional information on truck blocking and jacking. Also refer to page 7-40 for the location of grease fittings.

Inspect the steering cylinder piston rods, seals, and fasteners for damage, leaks, and looseness. Lubricate the steering axle linkage rod ends and linkage pivot points. Be sure to clean the grease fittings before lubricating, and remove the excess grease from all points after lubricating. Lubricate miscellaneous linkage as needed.

(2) Mast and tilt cylinder lubrication

Clean the fittings and lubricate the tilt cylinder rod end bushings (forward end) and both the base rod-end bushings (rear end). Clean and lubricate the mast support bushings.

(3) Lift chains

Lubricate the entire length of the mast rail lift and carriage chains with HYUNDAI chain and cable lube.

11) AIR CLEANING

Always maintain a lift truck in a clean condition. Do not allow dirt, dust, lint, or other contaminants to accumulate on the truck. Keep the truck free from leaking oil and grease. Wipe up all oil spills. Keep the controls and floorboards clean, dry, and safe. A clean truck makes it easier to see leakage and loose, missing, or damaged parts, and helps prevent fires. A clean truck runs cooler. The environment in which a lift truck operates determines how often and to what extent cleaning is necessary.

For example, trucks operating in manufacturing plants that have a high level of dirt, dust, or lint (for example, cotton fibers or paper dust) in the air or on the floor or ground, require more frequent cleaning. The radiator especially may require daily air cleaning to ensure correct cooling. If air pressure does not remove heavy deposits of grease, oil, etc., it may be necessary to use steam or liquid spray cleaner.

Lift trucks should be air cleaned at every PM interval, or more often if necessary.

※ **Use an air hose with special adapter or extension, a control valve, and a nozzle to direct the air properly. Use clean, dry, low pressure, compressed air. Restrict air pressure to 2.0 kgf/cm² (30 psi), maximum (OSHA requirement).**

⚠ **Wear suitable eye protection and protective clothing when air cleaning. Never point the air nozzle at anyone.**

Air clean the mast assembly, drive axle, radiator- from both counterweight and engine side, engine and accessories, drive line and related components, and steering axle and cylinder.

12) CRITICAL FASTENER TORQUE CHECKS

Fasteners in highly loaded (critical) components can quickly fail if they become loosened. Also, loose fasteners can cause damage or failure of the component. For safety, it is important that the correct torque be maintained on all critical fasteners of the components that directly support, handle, or control the load and protect the operator. (SEE SECTION 8. SPECIFICATIONS)

Critical items include:

- Drive axle mounting
- Overhead guard or cabin
- Drive and steering wheel mounting
- Tilt cylinder mounting and yokes
- Counterweight mounting
- Mast mounting and components

13) LIFT CHAIN MAINTENANCE

The chain system on the mast was designed for safe, efficient, and reliable transmission of lifting force from hydraulic cylinder to the forks. Safe use of your truck with minimum down time depends on the correct care and maintenance of the lift chains. Most complaints of unacceptable chain performance are a result of poor maintenance. Chains need periodic maintenance to give maximum service life.

⚠ **Do not attempt to repair a worn chain. Replace worn or damaged chains with a set (LH & RH). Do not piece chains together.**

(1) Inspect and lubricate the lift chains every 10 hours or daily and check tension every 250 hours or monthly. When operating in corrosive environments, inspect the chains every 50 hours. During the inspection, check for the following conditions:

· Rust and corrosion, cracked plates, raised or turned pins, tight joints, wear, and worn pins or holes.

· When the pins or holes become worn, the chain becomes longer. When a section of chain is 3% longer than a section of new chain, the chain is worn and must be discarded.

· Chain wear can be masured by using a chain scale or a steel tape measure. When checking chain wear, be sure to measure a segment of chain that moves over a sheave. Do not repair chains by cutting out the worn section and joining in a new piece. If part of a chain is worn, replace all the chains of both sides on a truck.

(2) Lift chain lubrication

Lift chain lubrication is an important part of your maintenance program. The lift chains operate under heavy loadings and function more safely and have longer life if they are regularly and correctly lubricated. HYUNDAI chain lubricant is recommended; it is easily sprayed on and provides superior lubrication. Heavy motor oil may also be used as a lubricant and corrosion inhibitor.

(3) Lift chain wear and replacement criteria

① New chain length

The distance from the first pin counted to the last pin counted in a span while the chains are lifting a small load.

② Worn chain length

The distance from the first pin counted to the last pin counted in a span while the chains are lifting a small load.

③ Span

The number of pins in the length (segment) of chain to be measured.

④ Pitch

The distance from the center of one pin to the center of the next pin.

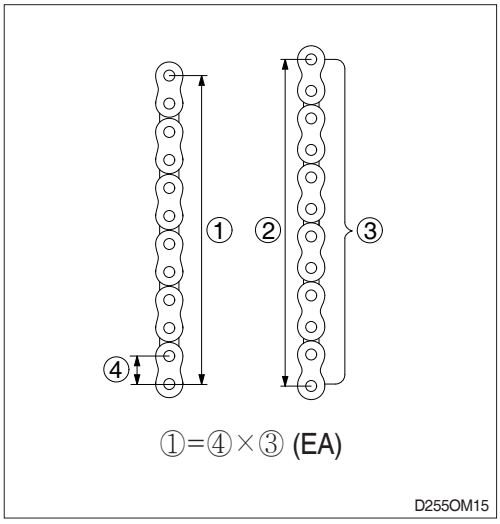

All chains must be replaced if any link has wear of 3% or more, or if any of the damaged conditions notes above are found during inspection. Order replacement chains from your HYUNDAI dealer. Replace all chains as a set. Do not remove factory lubrication or paint new chains. Replace anchor pins and worn or broken anchors when installing new chains. Adjust tension on new chains. Lubricate chains when they are installed on the mast.

※ **Please refer to your service manual for additional information on lift chain measurement and maintenance.**

10. HANDLING TRUCK IN EXTREMELY HOT PLACES

Pay careful attention particularly to the following points when handling the truck in extremely hot places.

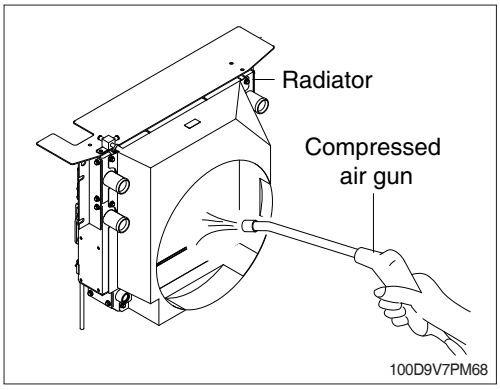

1) Scale and rust form more easily in the cooling system, so wash with anticorrosion liquid. Always try to have clean and soft water circulating in the system.

2) Clogging of the radiator fins is one cause of overheating, so use air or water jets to clean the fins. When doing this, the air nozzle must be at right angles to the radiator.
   · Air pressure max : 2 kgf/cm^2 (30 psi)

3) Check the fan belt tension. If it is too slack, adjust the tension. (SEE SECTION 8. SPECIFICATIONS)

4) In case of overheating, do not stop the engine immediately.
   (1) Run the engine at low idling.
   (2) Open the hood to ventilate the engine compartment.
   (3) When the water temperature drops, stop the engine.
   (4) Check the cooling water level. If it is low, add more water.

⚠ **Wear safety glasses and a face shield when using compressed air. Never touch the surge tank cap while the engine is hot. Steam may spurt out. Wait until the water temperature drops. It is extremely dangerous to try to check the fan belt tension while the engine is running. When inspecting the fan belt or other moving parts, or near such parts, always stop the engine first.**

11. COLD WEATHER OPERATION

1) PREPARATION FOR LOW TEMPERATURE

(1) Replace lubrication oil with oil of the prescribed viscosity.

(2) Fuel of low pour point must be used. ASTM D975 No.1 diesel fuel should be used at ambient temperature lower than -5˚C.

(3) When ambient temperatures are below use an anti-freeze mixture per the above table to prevent freezing of the cooling system.

Min ambient temperature (˚C)	-5	-10	-15	-20	-25	-30	-50
Amount of antifreeze (%)	25	30	35	40	45	50	60
Amount of water (%)	75	70	65	60	55	50	40

⚠ **Use ethylene glycol base permanent type antifreeze.**
⚠ **Use soft water (city water, etc.) as mixing water.**
⚠ **Cooling system must be thoroughly flushed before filling with antifreeze mixture.**
⚠ **When the climate becomes warmer and antifreeze is not needed, replace with soft water (city water, etc.) after thoroughly cleaning the cooling system.**
⚠ **Do not expose antifreeze to flame. It is inflammable.**

※ **Dispose of old antifreeze mixture in locally approved manner.**

2) BATTERY

As the ambient temperature drops, the battery capacity will drop and the electrolyte may sometimes freeze if the battery charge is low. Maintain the battery at a charge level of over 75% and insulate it against cold temperature so that the truck can be readily started the next morning.

※ **When the electrolyte level is low, add distilled water in the morning before work instead of after the day's work. This is to prevent fluid from freezing at night.**

3) CARE AFTER DAILY OPERATION

(1) Drain water from the fuel system to prevent freezing.
(2) Fill the tank at the end of each day of operation to drive out moisture laden air to prevent condensation.
Do not fill the tank to top.

⚠ **Explosive fumes may be present during refueling.**

12. RECOMMENDATION TABLE FOR LUBRICANTS

1) NEW TRUCK

New truck uses following fuel, coolant and lubricant.

Description	Specification
Engine oil	SAE 10W-30/15W-40 (API CK-4 class or better)
Transmission oil	HD HYUNDAI OIL BANK Xteer THF 75W-80
Axle oil	SAE 80W-90
Brake cooling oil	HD HYUNDAI OIL BANK Xteer THF 75W-80
Hydraulic oil	ISO VG32/VG46/VG68, Hyundai genuine long life hydraulic oil ISO VG15, Conventional hydraulic oil★1
Grease	Lithium base grease NLGI No.2
Fuel	ASTM D975-No.2, Ultra low sulfur diesel★2
Coolant	Mixture of 50% ethylene glycol base antifreeze and 50% water, ASTM D6210
DEF/AdBlue®	ISO 22241 (32.5% high-purity urea and 67.5% deionized water)

- SAE : Society of Automotive Engineers
- API : American petroleum Institute
- ISO : International Organization for Standardization
- NLGI : National Lubricating Grease Institute
- ASTM : American Society of Testing and Material
- DEF : Diesel Exhaust Fluid
  DEF compatible with AdBlue®

★1 : Cold region
Russia, CIS, Mongolia

★2 Ultra low sulfur diesel
- sulfur content ≤ 15 ppm

13. FUEL AND LUBRICANTS

Service point	Kind of fluid	Capacity ℓ (U.S. gal)	Ambient temperature ˚C(˚F) -50 (-58) -30 (-22) -20 (-4) -10 (14) 0 (32) 10 (50) 20 (68) 30 (86) 40 (104)
Engine oil pan	Engine oil	12 (3.17)	★SAE 5W-40 SAE 10W SAE 10W-30 SAE 5W-30 SAE 15W-40 SAE 30
Torque converter transmission	Transmission oil	18 (4.8)	HD HYUNDAI OIL BANK Xteer THF 75W-80
Axle	Gear oil	13 (3.43)	SAE 80W-90
Brake	Cooling oil	22 (5.8)	HD HYUNDAI OIL BANK Xteer THF 75W-80
Hydraulic tank	Hydraulic oil	125 (33)	★ISO VG 15 ISO VG 32
Cabin tilt hand pump		0.7 (0.2)	ISO VG 46 ISO VG 68
Fuel tank	Diesel fuel★1	171.5 (45.3)	★ASTM D975 NO.1 ASTM D975 NO.2
Fitting (Grease nipple)	Grease	-	★NLGI NO.1 NLGI NO.2
Radiator	Antifreeze : Water	14.2 (3.75)	Ethylene glycol base permanent type (50:50) ★Ethylene glycol base permanent type (60 : 40)
DEF/AdBlue® tank	Mixture of urea and deionized water	43 (11.4)	ISO 22241 (High-purity urea + deionized water (32.5:67.5))

NOTES :

- Engine oil should be API service class CK-4.
- Change the type of engine oil according to the ambient temperature.
- When using oil of different brands from the previous one, be sure to drain all the previous oil before adding the new engine oil.

★1 : Ultra low sulfur diesel
- sulfur content ≤ 15 ppm

★ : Cold region
Russia, CIS, Mongolia

1. SPECIFICATION TABLE

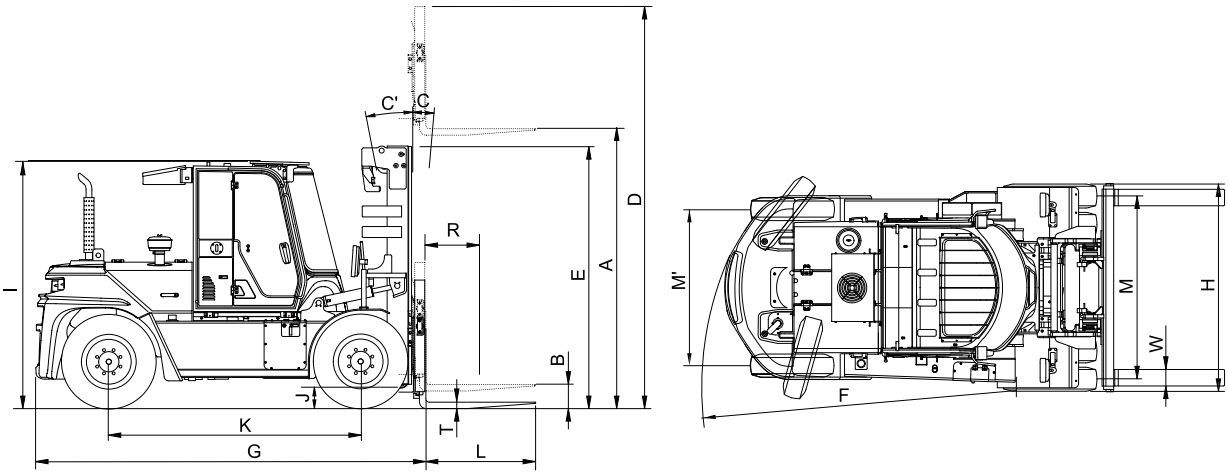

100D9V8SP01

Model			Unit	100D-9V
Capacity			kg (lb)	10000 (22000)
Load center		R	mm (in)	600 (24")
Weight(Unloaded)			kg (lb)	13125 (28936)
Fork	Lifting height	A	mm (ft·in)	3025 (9' 11")
	Free lift	B	mm (in)	150 (5.9)
	Lifting speed (Unload/Load)		mm/sec (ft/min)	500/440 (98.4/86.6)
	Lowering speed (Unload/Load)			500/500 (98.4/98.4)
	L×W×T	L,W,T	mm (in)	1200×180×75(47.2×7×3)
	Carriage width	N	mm (in)	2265 (89.2)
Mast	Tilt angle (forward/backward)	C/C'	degree	15/10
	Max. height	D	mm (ft·in)	4360 (14' 4")
	Min. height	E	mm (ft·in)	2850 (9' 4")
Body	Travel speed (Unload)		km/h (mph)	32.7 (20.3)
	Gradeability (Load)		%	34
	Min. turning radius (Outside)	F	mm (ft·in)	3965 (13' 0")
ETC	System set pressure		bar (psi)	226 (3271)
Overall length		G	mm (ft·in)	4245 (13' 9")
Overall width		H	mm (ft·in)	2265 (7' 5")
Cabin height		I	mm (ft·in)	2680 (8' 10")
Ground clearance		J	mm (in)	250 (9.8)
Wheel base		K	mm (ft·in)	2750 (9' 0")
Wheel tread front/rear		M/M'	mm (ft·in)	1693/1700 (5' 7"/5' 7")

2. SPECIFICATION FOR MAJOR COMPONENTS

1) ENGINE

Item	Unit	Specification
Model	–	Cummins F3.8
Type	–	Vertical, 4 cycle DI, EU Stage V diesel engine
Cooling Method	–	Water cooling
Number of cylinders and arrangement	–	4 cylinders, In-line
Firing order	–	1-3-4-2
Combustion chamber type	–	Direct injection
Cylinder bore X stroke	mm (in)	102×115 (4.0×4.5)
Piston displacement	cc (cu in)	3726 (227.4)
Compression ratio	–	17.2 : 1
Rated gross horse power	ps/rpm	112.4/2200
Maximum torque at rpm	kgf·m/rpm	51/1500
Engine oil quantity	ℓ (U.S. gal)	12 (3.17)
Dry weight	kg (lb)	360 (794)
High idling speed	rpm	2450
Low idling speed	rpm	850
Rated fuel consumption	g/kWh	217
Starting motor	V-kW	24-4.8
Alternator	V-A	28-70
Battery	V-AH	24-80

2) MAIN PUMP

Item	Unit	Specification	
Type	–	Axial piston variable pump	Gear fixed pump
Model	–	Casspa MVP	Casspa PLP
Displacement	cc/rev (in^3/rev)	67 (4.1)	9.17 (0.56)
Maximum operating pressure	bar (psi)	280 (4060)	250 (3625)
Rated speed (Max/Min)	rpm	2700/600	
Weight	kgf (lbf)	31.6 (69.7)	

3) MAIN CONTROL VALVE (MCV)

Item	Unit	Specification
Type	–	Mono block (3spool), Semi-Mono block (4 / 5spool)
Model	–	Buchholz NG16
Opearating method	-	Hydraulic pilot
Maximum flow rated (lift/lower, tilt)	lpm (U.S. gpm)	170 (45), 60 (16)
Lift/tilt relief valve set pressure (DV1)	bar (psi)	210 (3050)
Attachment oil flow rated (aux1/2/3)	lpm (U.S. gpm)	110 / 110 / 110 (29 / 29 / 29)
Attachment relief valve pressure (DV2)	bar (psi)	140 ~ 190 (2030 ~ 2760)
Built-in accessories valve	-	· Manual fork lowering valve (Emergency function) · Adj. max. fork lowering speed, Lower breake valve · Overcenter valve (tilt A2), Priority valve (steering)
Weight	kgf (lbf)	3 spool : 28 (61.7), 4 spool : 36 (79.4), 5 spool : 43 (94.8)

4) STEERING UNIT

Item	Unit	Specification
		100D-9V
Type	–	Load sensing
Model	–	VSP 200 LSH
Capacity	cc/rev (in^3/rev)	200 (12.2)
Steering relief valve set pressure	bar (psi)	160 ~ 165 (2320 ~ 2390)
Weight	kgf (lbf)	5.5 (12)

5) CYLINDER

Index			Unit	Specification
				100D-9V
Main lift	V300	Tube bore diameter × Rod diameter × Stroke	mm (in)	85×60×1475 (3.34×2.36×58.1)
Main lift	TS450			85×60×1463 (3.34×2.36×57.6)
Free lift				95×70×767 (3.74×2.76×30.2)
Tilt (15/10 degree)				115×60×307 (4.53×2.36×12.09)
Steering				85×55×149.5 (3.35×2.16×5.89)
Weight	Lift	V300	kgf (lbf)	68.1 (150)
	Tilt	15/10 degree		48 (106)

6) POWER TRAIN DEVICE

Item			Specification		
			100D-9V		
Torque converter	Type		3 Element, 1 stage, 2 phases		
	Stall ratio		2.395 : 1		
Transmission	Model		ZF 3WG94		
	Type		Full auto, power shift		
	Gear shift (F/R)		3/3		
	Adjustment		Electrical single lever type		
	Overhaul ratio	FR	1 : 4.714	2 : 2.341	3 : 0.974
		RR	1 : 4.711	2 : 2.340	3 : 0.974
Axle	Type		Front-wheel drive type, fixed location		
	Gear ratio		12.86		
	Gear		Ring & pinion gear type		
Wheels	Q'ty (FR/RR)		Double : 4/2		
	Front (drive)		9.00-20-14 PR		
	Rear (steer)		9.00-20-14 PR		
Brakes	Travel		Front wheel, wet disc brake		
	Parking		Calliper disc, SHAR (Spring Actuate Hydraulic Release) type		
Steering	Type		Full hydraulic, power steering		
	Steering angle		75.87˚ to both right and left angle, respectively		

3. TIGHTENING TORQUE

NO	Item		Size	kgf · m	lbf · ft
1	Engine	Engine mounting bolt	M12×1.25	12.3±3.0	89±21.7
2		Engine bracket mounting nut	M10×1.5	6.9±1.4	50±10.1
3		Radiator mounting bolt, nut	M10×1.5	6.9±1.4	50±10.1
4	Hydraulic system	Hydraulic pump mounting bolt	M16×2.0	19±2	138±14.5
5		MCV mounting bolt	M 8×1.25	2.5±0.5	18±3.6
6		Steering unit mounting bolt	M10×1.5	4±0.5	29±3.6
7		Tilt cylinder; rod-end bolt, nut	M20×2.5	58±6	420±43.4
8		Tilt cylinder pin; mounting bolt	M10×1.5	6.9±1.4	50±10.1
9	Power train system	Transmission mounting bolt, nut	M16×2.0	60.5±5.5	438±39.8
10		Torque converter mounting bolt	M10×1.5	6.9±1.4	50±10
11		Drive axle mounting bolt, nut	M27×3.0	150±15	1085±109
12		Propeller shaft (to axle and TM)	3/8-24 UNF	7.0±0.7	50.6±5.1
13		Steering axle mounting bolt, nut	M18×2.5	41.3±6.2	299±44.8
14		Front and rear wheel mounting nut	M22×1.5	62.0±9.3	448±67.3
15	Others	Counterweight mounting bolt	M30×3.5	100±15	723±108
16		Operator's seat mounting nut	M 8×1.25	2.5±0.5	18.1±3.6
17		Cabin mounting bolt	M12×1.75	12.8±3.0	92.6±21.7
18		Mast mounting bolt	M20×2.5	57.9±8.7	419±63

1. ENGINE SYSTEM

Trouble symptom	Probable cause	Remedy
Oil pressure warning lamp fails to go out.	· Low oil level in oil pan. · Oil filter element clogged. · Loose or worn oil pipe joint leaks oil.	· Add oil. · Replace element. · Check and repair.
Radiator pressure valve spouts steam.	· Lack of cooling water or water leakage. · Loosen fan belt. · Dust and scale accumulated in cooling system.	· Add water or repair. · Adjust belt. · Change water and clean the interior of cooling system.
Water temp gauge indicates red range, on right.	· Radiator fin clogged or fin damaged. · Thermostat or water temp gauge faulty. · Surge tank cap loosening.	· Clean or repair. · Replace · Retighten cap or replace packing.
Water temp gauge indicates red range, on left.	· Thermostat faulty. · Water temperature gauge faulty.	· Replace · Replace
Engine fails to start.	· Lack of fuel. · Air mixed in fuel system. · Fuel injection pump or nozzle defective. · Starting motor rotates slowly. · Engine compression insufficient. · Valve clearance out of adjustment.	· Add fuel. · Repair. · Replace. · See " Electrical system." · Adjust clearance
Engine emits whitish or bluish smoke.	· Excessive quantity of oil in oil pan. · Poor quality of fuel.	· Reduce oil quantity. · Replace with specified fuel.
Abnormal sound heard. (Fuel combustion or mechanical sound)	· Poor quality of fuel. · Overheating · Muffler interior damaged. · Excessively large valve clearance.	· Replace with specified fuel. · See Symptom "Radiator pressure valve spouts steam". · Replace · Adjust clearance.

2. ELECTRICAL SYSTEM

Trouble symptom	Probable cause	Remedy
Lamps dimming even at maximum engine speed.	· Faulty wiring.	· Check for loose terminal and disconnected wire.
Lamps flicker during engine operation.	· Improper belt tension.	· Adjust belt tension.
Charge lamp does light during normal engine operation.	· Charge lamp defective. · Faulty wiring.	· Replace. · Check and repair.
Alternator makes abnormal sounds.	· Alternator defective.	· Replace
Starting motor fails to run.	· Faulty wiring. · Insufficient battery voltage.	· Check and repair. · Recharge battery.
Starting motor pinion repeats going in and out.	· Insufficient battery voltage.	· Recharge battery.
Excessively low starting motor speed.	· Insufficient battery voltage. · Starting motor defective.	· Recharge battery. · Replace
Starting motor comes to a stop before engine starts up.	· Faulty wiring. · Insufficient battery voltage.	· Check and repair. · Recharge battery.
Heater signal does not become red. * Heater functions only when the coolant temperature is below 0˚C	· Faulty wiring. · Glow plug damaged.	· Check and repair. · Replace
Engine oil pressure warning lamp does not light when engine is stopped (with starting switch left in"ON" position).	· Caution lamp defective. · Caution lamp switch defective.	· Replace · Replace

3. TORQUE FLOW SYSTEM

Trouble symptom	Probable cause	Remedy
1. Excessive oil temperature rise		
1) Torque converter	· Improper oil level.	· Check oil level. Add or drain oil as necessary.
	· Impeller interfering with surroundings.	· After draining oil from oil tank and transmission, check and replace interfering parts.
	· Stator and free wheel malfunctioning.	· Check engine (stalling) speed. If necessary, replace.
	· Air sucked in.	· Check the inlet side joint or pipe. If necessary, retighten joint or replace gasket.
	· Water intruding into transmission case	· Check drained oil. If necessary, change oil.
	· Bearing worn or seizing.	· Disassemble, inspect, repair or replace.
	· Gauge malfunctioning.	· Check and, if necessary, replace.
2) Transmission	· Clutch dragging.	· Check to see whether or not truck moves even when transmission is placed in neutral position. If so, replace clutch plate.
	· Bearing worn or seized.	· Disassemble, check and replace.
2. Noise operation		
1) Torque converter	· Cavitation produced.	· Change oil, replace parts leaking air.
	· Flexible plate damaged.	· Listen to rotating sound at lowspeed operation. If necessary, repacle flexible plate.
	· Bearing damaged or worn.	· Disassemble, check and replace.
	· Gear damaged.	· Disassemble, check and replace.
	· Impeller interfering with surroundings.	· Check impeller or check drained oil for mixing of foreign matter. If necessary, change oil.
	· Bolt loosening.	· Disassemble and check. If necessary, retighten or repalce.
	· Spline worn.	· Disassemble, check and replace.
	· Noise gear pump operation.	· Disassemble, check and replace.
2) Transmission	· Dragging caused by seizing clutch.	· Check to see whether or not truck moves even when transmission is in neutral position. If so, replace clutch plate.
	· Bearing worn or seizing.	· Disassemble, check and replace
	· Gear damaged.	· Disassemble, check and replace
	· Bolt loosening.	· Disassemble, check and retighten or replace
	· Spline worn.	· Disassemble, check and replace

Trouble symptom	Probable cause	Remedy
3.Low output power 1) Torque converter	· Insufficient hydraulic pressure :	
	– Low oil level.	– Check oil level and add oil
	– Air sucked in.	– Check joints and pipes. If necessary, retighten joint or replace packing.
	– Oil filter clogging.	– Check and replace
	– Oil pump worn. (Low delivery flow)	– Check oil pressure. If necessary replace pump.
	– Regulator valve coil spring fatigued.	– Check spring tension. If necessary, replace.
	– Control valve spool malfunctioning.	– Disassemble, check and repair or replace.
	– Piston or O-ring worn.	– Disassemble, check measure and replace.
	· Stator free wheel cam damaged.	– Check stalling speed. (Increased engine load will cause excessive drop of stalling speed.) – Check oil temperature rise. If any, replace free wheel.
	· Stator free wheel seizing.	– Check temperature plate. (No-load will cause temperature rise) – Replace free wheel if a drop of starting output is found.
	· Impeller damaged for interfering with the surroundings.	– Check drained oil for foreign matter. If any, change oil.
2) Transmission	· Flexile plate deformed	– Replace flexible plate
	· Use of poor quality of oil or arising of air bubbles.	– Check and change oil.
	– Air sucked in from inlet side.	– Check joints and pipes. If necessary, retighten joint or replace packing.
	– Low torque converter oil pressure accelerates generation of air bebbles.	– Check oil pressure. – Check drained oil and change oil.
	– Oil mixing with water.	– Check and adjust.
	– Inching rod out of adjustment.	
	· Clutch slipping	– Check oil pressure.
	– Lowering of weight.	– Disassemble, check, measure and replace.
	– Piston ring or O-ring worn.	– Disassemble, check and replace.
	– Clutch piston damaged.	– Check to see whether or not truck moves even when transmission is in neutral position. If so, replace.
	– Clutch plate seizing or dragging.	

Trouble symptom	Probable cause	Remedy
4.Unusual oil pressure		
1) Oil pressure is high	· Control valve malfunctioning.	(1)Check for spool operation. If necessary, replace valve. (2)Check for clogging of small hole in valve body. If necessary, clean or repair.
	· Cold weather. (high oil viscosity)	· When atmospheric temp is below freezing point (when normal oil pressure is recovered if heated to 60 ~ 80˚C), change oil.
	· Use of improper oil.	· Check and change oil.
2) Oil pressure is low	· Gear pump malfunctioning(worn).	· Disassemble, check and replace.
	· Oil leaks excessively : (1)Control valve oil spring defective.	· Check spring tension (see spring specification). If necessary replace.
	(2)Control valve spool defective.	· Disassemble, check, and repair or replace valve.
	· Air sucked in.	· Check joints and pipes. If necessary, retighten joint or replace packing.
	· Low oil level.	· Check oil level and add oil.
	· Oil filter clogging.	· Check and replace.
3) Transmission	· Oil leaks excessively.	· Disassemble, check (piston ring and O-ring for wear and other defects), and replace.
5.Power is not transmitted		
1) Torque converter	· Clutch plate damaged.	· Check for damage by listening to abnormal sounds at a low converter speed and replace.
	· Low oil level.	· Check oil level and add oil
	· Oil pump driving system faulty.	· Disassemble and check for wear of pump gear, shaft and spline. Replace defective parts.
	· Shaft broken.	· Check and replace.
	· Lack of oil pressure.	· Check oil pump gear for wear and for oil suction force. If necessary, replace pump.
2) Transmission	· Low oil level.	· Check oil level and add oil.
	· Inching valve and link lever improperly positioned.	· Check measure and adjust.
	· Forward/reverse spool and link lever improperly positioned.	· Check and adjust.
	· Clutch fails to disengage : (1)Clutch case piston ring defective.	· Disassemble, check and replace
	(2)Main shaft plug slipping out.	· Disassemble, check and repair or replace
	· Clutch seizing.	· Check to see whether or not truck moves even then transmission is in neutral position. If so, replace.
	· Shaft broken off.	· Disassemble, check(main shaft, etc.), and replace.
	· Clutch drum damaged (spring groove).	· Disassemble, check and replace.
	· Clutch snap ring broken.	· Disassemble, check and repair or replace.

Trouble symptom	Probable cause	Remedy
5. Power is not transmitted (Continue)	· Foreign matter intruding into oil passage to clutch. · Shaft spline worn.	· Disassemble, check and repair or replace. · Disassemble, check and replace.
6. Oil leakage (Transmission and torque converter)	· Oil leaks from oil seal. · Oil leaks from case joining surfaces. · Oil leaks from joint or pipe. · Oil leaks from drain plug. · Oil leaks from a crack.	· Disassemble and check for wear of seal lips and mating sliding surfaces (pump boss, coupling etc.) Replace oil seal, pump boss, coupling, etc. · Check and retighten or replace packing. · Check and repair or replace gasket. · Check and retighten or gasket. · Check and replace cracked part.

4. STEERING SYSTEM

Trouble symptom	Probable cause	Remedy
1. Steering wheel drags.	· Low oil pressure. · Bearing faulty. · Spring spool faulty. · Reaction plunger faulty. · Ball-and-screw assembly faulty. · Sector shaft adjusting screw excessively tight. · Gears poorly meshing. · Flow divider coil spring fatigued.	· Check locknut. Repair. · Clean or replace. · Clean or replace. · Replace. · Clean or replace. · Adjust. · Check and correct meshing. · Replace.
2. Steering wheel fails to return smoothly.	· Bearing faulty. · Reaction plunger faulty. · Ball-and-screw assy faulty. · Gears poorly meshing.	· Clean or replace. · Replace. · Clean or replace. · Check and correct meshing.
3. Steering wheel turns unsteadily. Steering system makes abnormal sound or vibration.	· Locknut loosening. · Metal spring deteriorated. · Gear backlash out of adjustment. · Air in oil circuit.	· Retighten. · Replace. · Adjust. · Bleed air.
4. Abnormal sound heard when steering wheel is turned fully	Valve · Faulty. (Valve fails to open.) Piping · Pipe (from pump to power steering cylinder) dented or clogged.	· Adjust valve set pressure and check for specified oil pressure. · Repair or replace.
5. Piping makes abnormal sounds.	Oil pump · Lack of oil. · Oil inlet pipe sucks air. · Insufficient air bleeding.	· Add oil. · Repair. · Bleed air completely.
6. Valve or valve unit makes abnormal sounds.	Oil pump · Oil inlet pipe sucks air. Valve · Faulty. (Unbalance oil pressure) Piping · Pipe (from pump to power steering) dented or clogged. · Insufficient air bleeding.	· Repair or replace. · Adjust valve set pressure and check specified oil pressure. · Repair or replace. · Bleed air completely.
7. Insufficient or variable oil flow.	· Flow control valve orifice clogged.	· Clean.
8. Insufficient or variable discharge pressure.	Piping · Pipe (from tank to pipe) dented or clogged.	· Repair or replace.

5. BRAKE SYSTEM

Trouble symptom	Probable cause	Remedy
1. Insufficient braking force	· Hydraulic system leaks oil. · Hydraulic system sucks air. · Disk worn. · Brake valve malfunctioning · Hydraulic system clogged	· Repair and add oil. · Bleed air. · Replace · Repair or replace. · Clean.
2. Brake acting unevenly. (Truck is turned to one side during braking.)	· Tires unequally inflated. · Brake out of adjustment. · Disk surface roughened. · Wheel bearing out of adjustment. · Hydraulic system clogged.	· Adjust tire pressure. · Adjust. · Repair by polishing or replace. · Adjust or replace. · Clean.
3. Brake trailing.	· Pedal has no play. · Piston cup faulty. · Brake valve return port clogged. · Hydraulic system clogged. · Wheel bearing out of adjustment.	· Adjust. · Replace. · Clean. · Clean. · Adjust or replace.

6. HYDRAULIC SYSTEM

Trouble symptom	Probable cause	Remedy
1. Large fork lowering speed.	· Seal inside control valve defective. · Oil leaks from joint or hose. · Seal inside cylinder defective.	· Replace spool or valve body. · Replace. · Replace packing.
2. Large spontaneous tilt of mast.	· Tilting backward : Check valve defective. · Tilting forward : Tilt lock valve defective. · Oil leaks from joint or hose. · Seal inside cylinder defective.	· Clean or replace. · Clean or replace. · Replace. · Replace seal.
3. Slow fork lifting or slow mast tilting.	· Lack of hydruilc oil. · Hydrauic oil mixed with air. · Oil leaks from joint or hose. · Excessive restriction of oil flow on pump suction side. · Relief valve fails to keep specified pressure. · Poor sealing inside cylinder. · High hydraulic oil viscosity. · Mast fails to move smoothly. · Oil leaks from lift control valve spool. · Oil leaks from tilt control valve spool.	· Add oil. · Bleed air. · Replace. · Clean filter. · Adjust relief valve. · Replace packing. · Change to SAE10W, class CF engine oil. · Adjust roll to rail clearance. · Replace spool or valve body. · Replace spool or valve body.
4. Hydraulic system makes abnormal sounds.	· Excessive restriction of oil flow pump suction side. · Gear or bearing in hydraulic pump defective.	· Clean filter. · Replace gear or bearing.
5. Control valve lever is locked	· Foreign matter jammed between spool and valve body. · Valve body defective.	· Clean. · Tighten body mounting bolts uniformly.
6. High oil temperature.	· Lack of hydraulic oil. · High hydraulic oil viscosity. · Oil filter clogged.	· Add oil. · Change to SAE10W, class CF engine oil. · Clean filter.

7. MAST AND FORK

1) MAST

Problem	Cause	Remedy
Forks fail to lower.	· Deformed mast or carriage.	· Disassemble, repair or replace.
Fork fails to elevate	· Faulty hydraulic equipment. · Deformed mast assembly.	· See troubleshooting hydraulic pump and cylinders in section 6, hydraulic system. · Disassemble mast and replace damaged parts or replace complete mast assembly.
Slow lifting speed and insufficient handling capacity.	· Faulty hydraulic equipment. · Deformed mast assembly.	· See troubleshooting hydraulic pump and cylinders in section 6, hydraulic system. · Disassemble mast and replace damaged parts or replace complete mast assembly.
Mast fails to lift smoothly.	· Deformed masts or carriage. · Faulty hydraulic equipment. · Damaged load and side rollers. · Unequal chain tension between LH & RH sides. · LH & RH mast inclination angles are unequal. (Mast assembly is twisted when tilted)	· Disassembly, repair or replace. · See Troubleshooting Hydraulic Cylinders, pump and control valve in section 6, hydraulic system. · Replace. · Adjust chains. · Adjust tilt cylinder rods.
Abnormal noise is produced when mast is lifted and lowered.	· Broken load roller bearings. · Broken side roller bearings. · Deformed masts. · Bent lift cylinder rod. · Deformed carriage. · Broken sheave bearing.	· Replace. · Replace. · Disassemble, repair or replace. · Replace. · Replace. · Replace.
Abnormal noise is produced during tilting operation.	· Insufficient lubrication of anchor pin, or worn bushing and pin. · Bent tilt cylinder rod.	· Lubricate or replace. · Replace.

2) FORKS

<table>
<tr><th>Problem</th><th>Cause</th><th>Remedy</th></tr>
<tr><td>Abrasion</td><td>Long-time operations causes the fork to wear and reduces the thickness of the fork.
Inspection for thickness is needed.
· Wear limit : Must be 90% of fork thickness</td><td>If the measured value is below the wear limit, replace fork.</td></tr>
<tr><td>Distortion</td><td>Forks are bent out of shape by a number of reasons such as overloading, glancing blows against walls and objects, and picking up load unevenly.
· Difference in fork tip height
<table>
<tr><th>Fork length (mm)</th><th>Height difference (mm)</th></tr>
<tr><td>equal or below 1500</td><td>3</td></tr>
<tr><td>above 1500</td><td>4</td></tr>
</table></td><td>If the measured value exceeds the allowance, replace fork.</td></tr>
<tr><td>Fatigue</td><td>Fatigue failure may result from the fatigue crack even though the stress to fork is below the static strength of the fork. Therefore, a daily inspection should be done.
· Crack on the fork heel.
· Crack on the fork weldments.</td><td>Repair fork by expert.
In case of excessive distortion, replace fork.</td></tr>
</table>

1. ENGINE SYSTEM

1) EASE OF STARTING, NOISE

(1) Set gear selector lever at NEUTRAL.

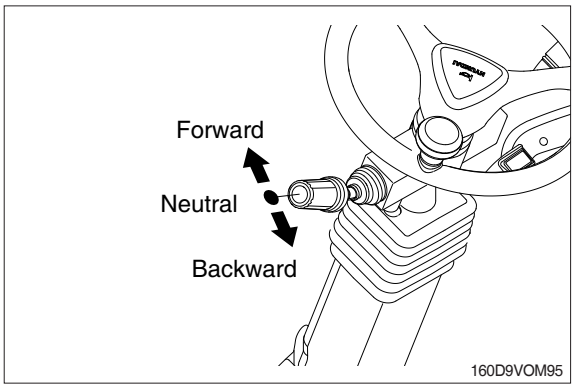

(2) Turn the parking brake switch ON.
(3) Turn ON start switch, automatically heating operated.
(4) When heater signal lamp goes out, turn key to START, and start engine.
※ **When engine starts, check if it starts smoothly, and if it makes any abnormal noise.**

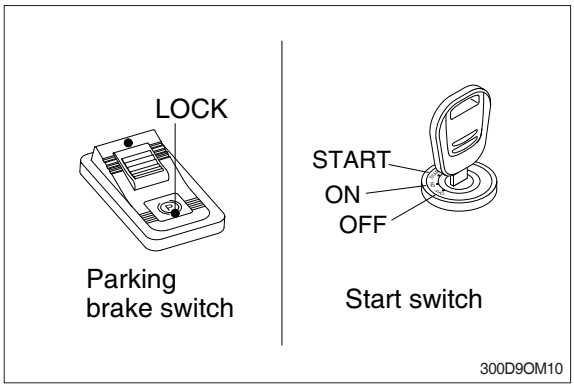

2) IDLING

(1) After warming up engine, run at idling.
(2) Check that engine maintains steady, smooth rotation without gasping, abnormal noise, abnormal explosions, or irregular vibration.
(3) Check that idling speed is within specified range.
(4) Idle rpm : SEE 8. SPECIFICATION

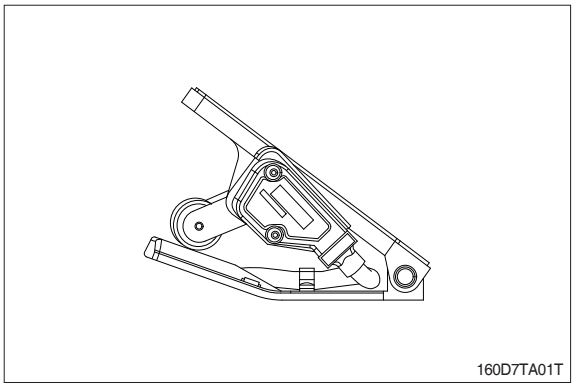

3) WHEN ACCELERATOR PEDAL IS DEPRESSED

(1) Check that accelerator pedal does not catch when depressed.
(2) Check that engine speed increases in accordance with amount pedal is depressed.
(3) When doing this, check that engine speed changes without gasping, abnormal noise, abnormal explosions, or irregular vibration.
(4) Check that exhaust gas is colorless when the engine is idling, and a thin black color when accelerator pedal is depressed.
(5) Max speed : SEE SECTION 8. SPECIFICATIONS

4) SURGE TANK CAP

(1) Push pressure regulator spring with finger and check that tension is correct.
(2) Pull negative pressure valve, and check that it is closed when released.
(3) If packing is damaged, replace whole surge tank cap assembly.

⚠ **While the coolant in the radiator is retained hot temperature, do not open the surge tank cap.**
It will gush out the hot water and someone might get scalded or severe injured.

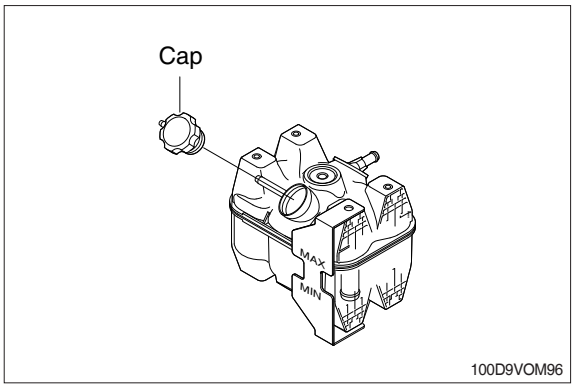

5) FUEL FILTER ELEMENT (DIESEL)

(1) The fuel filter element cannot be inspected from the outside, so replace it periodically (refer to 7.PLANNED MAINTENANCE AND LUBRICATION).
(2) Always use HYUNDAI Forklift genuine parts when replacing the element.
(3) After replacing the element, run the engine and check for oil leakage from the filter mount.

6) ENGINE OIL

(1) Check oil level with dipstick and add oil if necessary.
(2) Check oil for discoloration or deterioration. Change oil if discolored or deteriorated.
(3) Engine oil quantity : See section 8. Specification

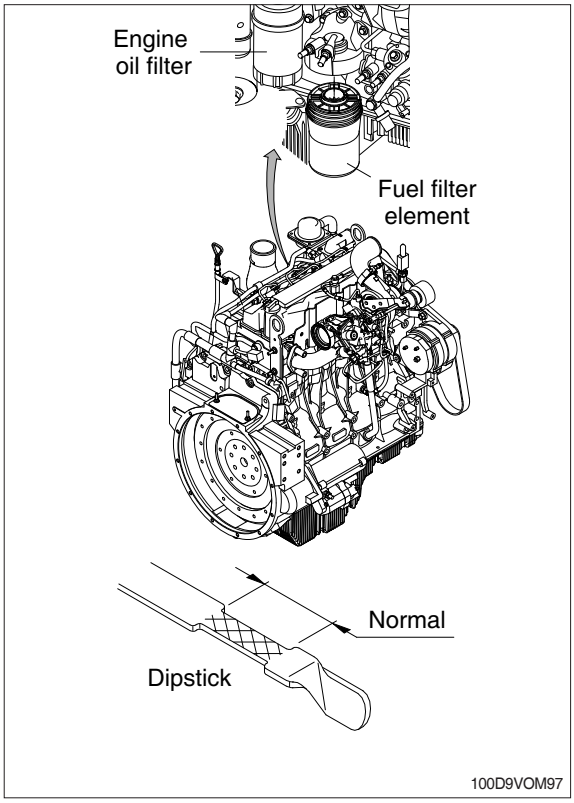

7) ENGINE OIL FILTER

The condition of the oil filter element cannot be inspected from the outside so replace the engine oil filter periodically. Refer to 7. PLANNED MAINTENANCE AND LUBRICATION.
Use a filter wrench and remove the whole cartridge assembly.

⚠ **If a spilt oil on the engine is left as it is after replacing the engine oil filter, there is dangerous material for a fire.**
Make sure that the spilt oil is wiped thoroughly away.

8) CHECK FAN BELT TENSION

(1) An deflection method can be used to check belt tension by applying 11 kgf (25 lbf) force between the pulleys on V-belts. If the deflection is more than one belt thickness per foot of pulley center distance, the belt tension must be adjusted.

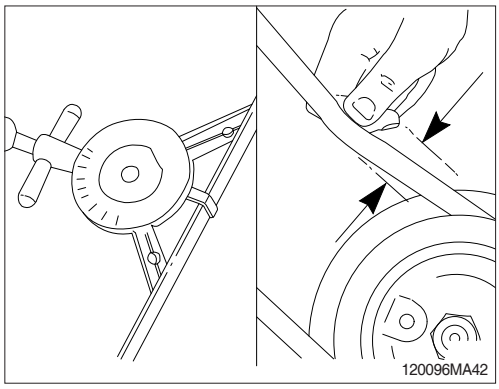

(2) Inspect the fan belt for damage.

① Transverse (across the belt) cracks are acceptable.

② Longitudinal (direction of belt ribs) cracks that intersect with transverse cracks are not acceptable.

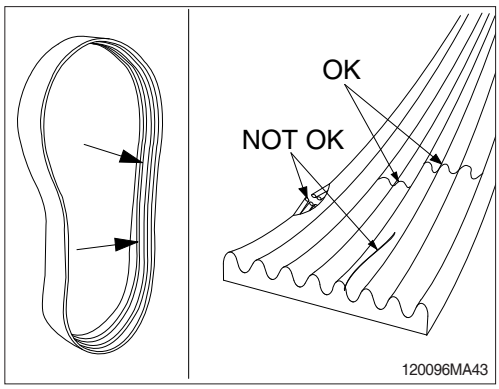

③ Inspect the belt
- Embedded debris
- Uneven/excessive rib wear
- Exposed belt cords
- Glazing (high heat)

※ **If any of the above conditions are present, the belt is unacceptable for reuse and must be replaced.**

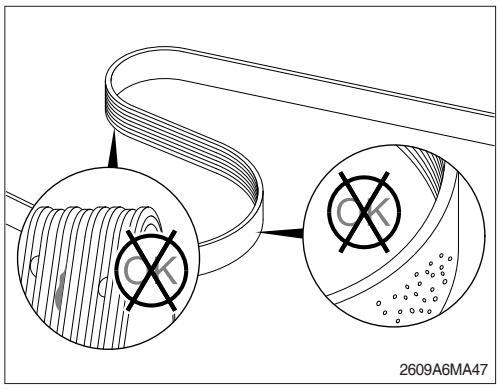

9) FAN

Move fan backwards and forwards by hand to check for looseness.
Tighten mounting bolt with a spanner.

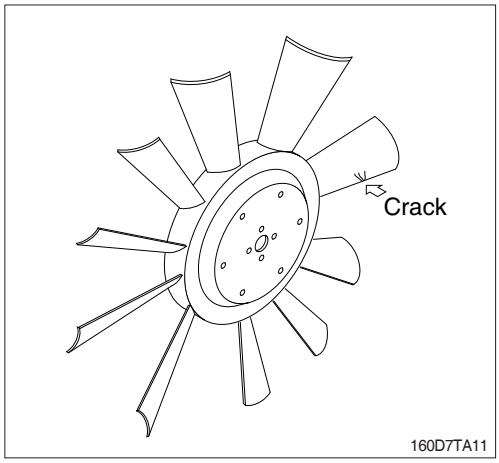

2. DRIVE SYSTEM

1) GEAR SELECTOR LEVER

(1) Neutral starting

Engine can be started only when the shifting lever is in neutral position.

(2) Shifting FWD/REV

① Forward

Push the lever forward then forward solenoid valve operates and oil comes to forward clutch thus the truck will run forward.

② Reverse

Pull the lever backward then reverse solenoid valve operates and oil comes to reverse clutch thus the truck will run backward.

2) OIL LEAKAGE

Check that there is no oil leakage from torque converter, transmission or control valve. If oil oozes out and forms drops, replace packing.

3) A D J U S T M E N T O F T H E ACCELERAOTR PEDAL

Pedal operation range is "A". If the range is differ much from specification, replace the pedal immediately.

· Pedal angle (A) : 17.5±2˚

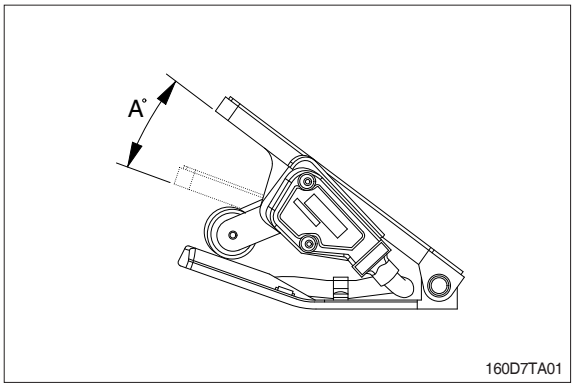

4) ADJUSTMENT OF THE BRAKE AND INCHING PEDAL

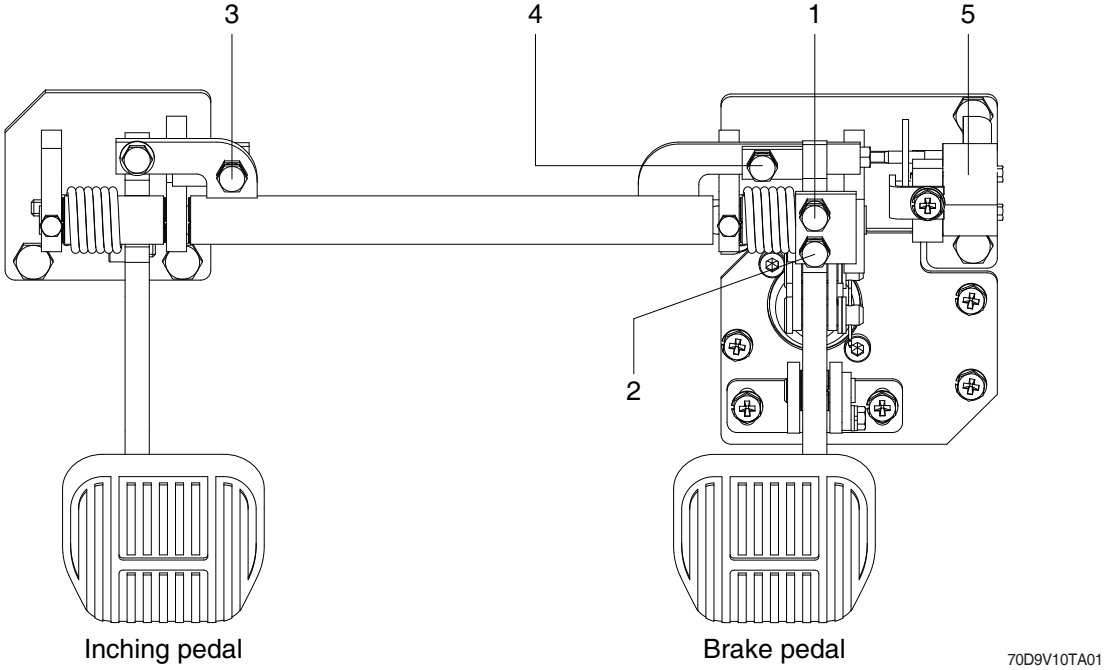

1	Brake stopper bolt	3	Inching stopper bolt	5	Inching sensor
2	Brake storke limit bolt	4	Brake&inching pedal interlock bolt		

(1) Brake pedal

· Adjust the brake stopper bolt (1) so that pedal height is "H".

Unit : mm

H	IDLE
149±1	0

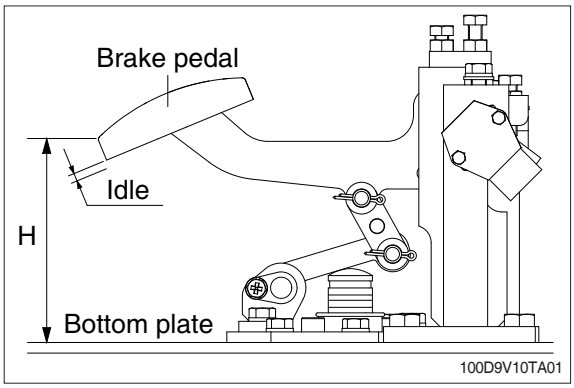

(2) Inching pedal

· Adjust inching stopper bolt (3) so that pedal height is "H".

· Adjust rod of inching cable so that inching pedal play is idle stroke when pedal height is "H".

· Adjust the brake and inching pedal interlock bolt (4) so that brake pedal interconnects with inching pedal at inching pedal stroke "P".

Unit : mm

H	P	IDLE
149±1	7	0

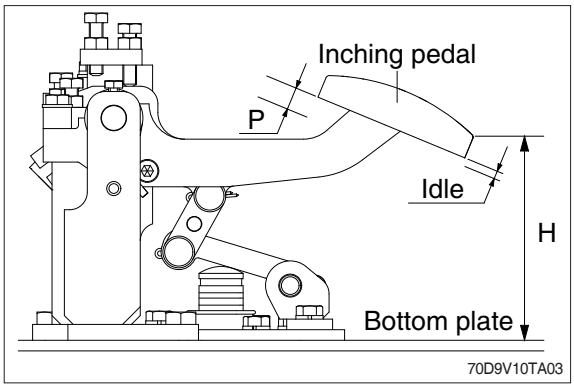

3. TRAVEL SYSTEM

1) TIRES

(1) Check tire pressure using tire gauge : SEE page 5-3 CHECK BEFORE STARTING ENGINE.

(2) Check visually for cracks and damage to tread and side wall. If crack or damage is serious, replace tire.

(3) Wear
Measure tread of pneumatic tires(tires with air). Depth of tread must be at least 1.6 mm (0.06 in) at point 1/4 across width of tread. A/B≒4.

(4) Check tire visually for uneven wear, stepped wear or any other abnormal wear. Check also for pieces stuck in tire.

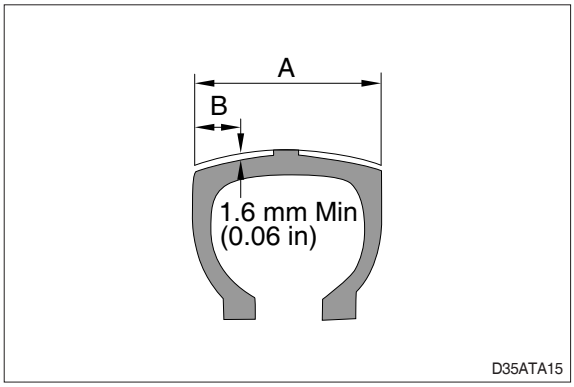

2) HUB NUTS

Use wrench to check for loose hub nuts.
Tighten any loose hub nuts to specified tightening torque : SEE SECTION 8. SPECIFICATIONS

3) RIM SIDE RING

Check rim side ring for deformation or cracks. Check visually or use crack detection method.
· Rear rim connecting nut torque : SEE SECTION 8. SPECIFICATIONS

4) STEERING AXLE

(1) Push axle in from one side or measure front to rear clearance with feeler gauge. Check that clearance is within 2 mm. If clearance is more than 2mm, insert shim to reduce clearance to within 0.7 mm.
· Mounting bolt torque : SEE SECTION 8. SPECIFICATIONS

(2) Measure clearance between center pin and bushing. Check that clearance is within 0.5 mm (0.02 in) and that there is an oil groove on the bushing.

5) DRIVE AXLE

Check that there is no deformation or crack around mounting bolts of front axle and main frame and at welds. Check visually or use crack detection method.
Mounting bolt torque : SEE SECTION 8. SPECIFICATIONS

4. STEERING SYSTEM

1) STEERING WHEEL

Set rear wheels facing straight forward, then turn steering wheel to left and right. Measure range of steering wheel movement before rear wheel starts to move. Range should be 30 ~ 60 mm at rim of steering wheel. If play is too large, adjust at gearbox. Test steering wheel play with engine at idling.

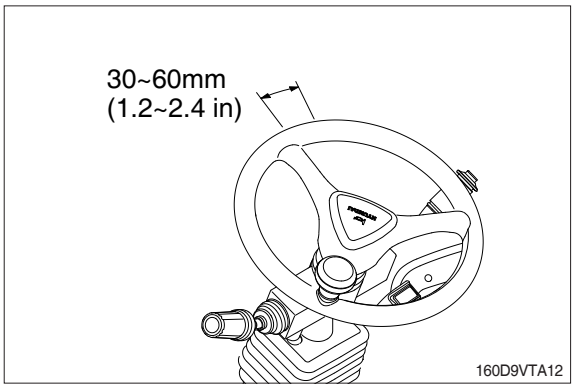

2) KNUCKLE

Check knuckle visually or use crack detection method. If the knuckle is bent, the tire wear is uneven, so check tire wear.